Susan Hatchell
Landscape Architecture, PLLC

711 West North Street
Raleigh, NC 27603
Tel: 919.838.9600
e-mail: jennifer@susanhatchell.com

To: All Interested Bidders and Plan Holders
From: Jennifer Steed, Senior Project Manager
RE: Lake Myra County Park Phase 1 (RFB#26-077)
Addendum No. 3
Date: September 29, 2026

The following items clarify, add to, delete from and/or otherwise change and supersede information previously issued to you in the Bid Documents for the above-referenced project. As such, said items shall be considered part of the contract and receipt of this addendum shall be acknowledged appropriately in the bid package. Please review the following items carefully and adjust your proposal accordingly.

Items:

1. See attached current plan holders list.

2. See attached Revised Bid Proposal Form.

3. See attached new and reclaimed playground equipment lists.

4. See attached Addendum No. 3 (including revised sheets) from Esse Architects.

5. See attached Addendum No. 3 (including revised Sheets) from IMEG.

6. See attached Addendum No. 3 (including revised Sheets) from Wooten.

7. See attached updated Site Structural Sheets:
   S0.1 Specifications Index
   S1.1 Typical Bridge Details
   S1.2 Boardwalk Plans
   S1.3 Typical Boardwalk Details

8. Download updated Civil Sheets using this link or from www.planscope.com:
   CE-401 Grading Enlargement Plan East
   CE-404A Grading Enlargement Plan East
   CE-404B Grading Enlargement Plan East
   CE-500 Overall Erosion Control Plan East
   CE-501 Erosion Control Enlargement Phase 1
   CE-502 Erosion Control Enlargement Phase 1
   CE-503 Erosion Control Enlargement Phase 1

Susan Hatchell
Landscape Architecture, PLLC

711 West North Street
Raleigh, NC 27603
Tel: 919.838.9600
e-mail: jennifer@susanhatchell.com

CE-504 Erosion Control Enlargement Phase 1
CE-505 Erosion Control Enlargement Phase 2
CE-506 Erosion Control Enlargement Phase 2
CE-507 Erosion Control Enlargement Phase 2
CE-508 Erosion Control Enlargement Phase 2
CE-509 Erosion Control Details
CE-510 Erosion Control Details
CE-511 Erosion Control Details
CE-512 Erosion Control Details
CE-513 Erosion Control Details
CW-403A Grading Enlargement West
CW-403B Grading Enlargement West
CW-403C Grading Enlargement West
CW-403D Grading Enlargement West

9. Additional bidder questions are currently under review. Responses to those questions, together with any resulting revisions to the Contract Documents, will be issued by the final addendum. Final Addendum Date Confirmation - **The final addendum will be sent no later than 5:00 PM Wednesday, September 30, 2026.**

10. The following planting substitutions have been approved:

    PPM Prairie Plug Mix:
    - Euthamia graminifolia (Solidago graminifolia) in lieu of Euthamia caroliniana
    - Helianthus angustifolius in lieu of Helianthus atrorubens
    - Liatris spicata in lieu of Liatris pilosa
    - Penstemon digitalis in lieu of Penstemon australis
    - Coreopsis lanceolata in lieu of Pityopsis graminifolia
    - Phemeranthus teretifolius in lieu of Sabatia angularis
    - Solidago rigida in lieu of Solidago erecta
    - Symphyotrichum oblongifolium 'Raydons Favorite' in lieu of S. grandiflorum
    - Symphyotrichum laeve in lieu of Symphyotrichum patens

11. Bidder Question: Architectural details call for 2x4 T&G roof decking however structural drawings call out 2x6. Which is correct?
    a. **Response: All structural roof deck to be 2x6 T&G**

12. The Park Center structural drawings reference a PC-S304 drawing. Can this drawing be provided?
    a. **Response: See addendum #3 for PC-S304**

13. Bidder question: Where is the grading plan north of plan sheet CE-400 East to where it

711 West North Street
Raleigh, NC 27603
Tel: 919.838.9600
e-mail: jennifer@susanhatchell.com

ties into existing trail and the Western phase

a. **Response: Refer to the Sheets CE-401, CE-404A, CE-404B, and the updated Erosion and Control Drawings**

14. Bidder question: There are no proposed grades shown for the trail highlighted below. Could you please advise on the intended grading for this trail segment?
    a. **Response: See Sheets CW-403A, CW-403B, CW-403C, and CW-403D for grading of the proposed trail.**

15. Bidder question: Unsuitable Soil / On-Site Disposal - Allowances/Unit Prices 6 and 7 (012100 3.2.F-G) describe on-site disposal and re-use of unsuitable soil. Addendum 01 minutes XXVI.k state there is no designated on-site location for debris or excess soil. Please confirm where on-site disposal/re-spread is permitted, or whether all excess and unsuitable soil must be hauled off site.
    a. **Response: Assume all excess and unsuitable soil must be hauled off site.**

16. I do not see the elevations for the retaining wall on the north side of the park center or for the walls east of the park center. The civil drawings state to see the site structural drawings but the site structural drawings do not show any top and bottom of wall heights.
    a. **Response: Refer to the revised Sheet CE-401 for retaining wall elevations.**

17. Can a profile view be provided for the boardwalks on the East side parcel?
    a. **Response: Refer to boardwalk layout on sheet 2/S1.2 for framing requirements at all boardwalk locations.**

18. Does the mentions 19% (KDAT) for lumber apply to the framing of the boardwalks and the decking?
    a. **Response: Yes, it applies to the framing and the decking.**

19. Is there a desired headwall/wingwall design to be used at the start and ends of the boardwalks?
    a. **Response: A headwall/wingwall is not required.**

20. Can the boardwalks/pier designs be beefed up to allow for “top down” construction methods when building over water?
    a. **Boardwalks were not designed for top-down construction.**

21. Sheet S1.3 — detail 4/S1.2 shows posts set in concrete. Where does this apply to the boardwalks (approach rails)?
    a. **Response: Required at any boardwalk location that requires a post in the framing layout, ref S1.2. Site and grade coordination will be required to**

711 West North Street
Raleigh, NC 27603
Tel: 919.838.9600
e-mail: jennifer@susanhatchell.com

determine all post locations.

22. What are the load ratings for each structure?
    a. **Response: All boardwalk structures are designed for a maximum total vehicular load of 4,000 lbs. Current design does not meet H5 vehicle loading requirements. Areas designated as overlooks are designed as pedestrian only areas.**

23. Bidder question: Are there any elevations that can be provided to determine pile lengths and cross bracing for the boardwalk?
    a. **Response: For bridge pile installation locations, grade at top of competent soil (lake bottom) to top of pile will determine use of structural detail 1 or 2 on S1.1. Actual elevation and grade on site will determine pile length and bracing requirements.**

24. Please specify the brand and type of kayak launch/boat launch required for the boat launch area.
    a. **Response: Approved manufacturers include EZ Dock, FWM Docks, AccuDock or approved equal.**

25. Bidder question: Please confirm 36" handrail is acceptable on callouts for the boardwalks. 42" minimum is typical.
    a. **Response: A 42" railing will be used on the portions of the boardwalks that are over the lake.**

26. Bidder question: Would concrete trails be an option in between the boardwalks?
    a. **Response: Concrete trails are not an option.**

27. Bidder question: Can you clarify what scope of work the Trail Building Subcontractor requirements are for? This is typically required for natural surface trails however all the trails appear to be paved.
    a. **The subcontractor will be constructing the trails through forested areas and is required to have previous experience with forest trail construction. Installation of trails within forested areas (paved or natural surface trails) is a separate specialty from typical grading, paving and landscaping as there are different design, accessibility, maintenance and ecological habitat protection standards than typical public spaces. We are only requiring the Trail Builder sub-contractor have prior experience and references rather than have Professional Trailbuilders Association (PTBA) certification.**

28. Bidder question: Are the 2 "New posts and shade structures" shown on the playground provided by the GC or the owner?

711 West North Street
Raleigh, NC 27603
Tel: 919.838.9600
e-mail: jennifer@susanhatchell.com

a. **Response: The posts and shade structures will be provided by the Owner.**

29. Bidder question: Can a list of the reclaimed owner provided playground equipment be provided along with spec sheets, so we know what we are installing?
    a. **Response: See attached list of reclaimed Landscape Structures play equipment.**

30. Bidder question: Addendum 1 states building address signage is under separate contract. Plans show building address signage is GC provided. Please clarify
    a. **Response: Building address signage is GC provided.**

31. Bidder question: Fishing Pier - Section 011000 1.4.A.1 lists the fishing pier and boardwalks in the base scope. Section 012300 Alternate #3 states "Base Bid: No Fishing Pier" and Alternate #1 states "Base Bid: No Boardwalk A." Please confirm the fishing pier and Boardwalk A are excluded from the base bid. Also, Alternates #2 and #3 both reference L-106 and S1.1-S1.3. Please identify the limits of work for each so structural elements are not carried in both.
    a. **Response: The base scope does not include Boardwalk A, the boating access, and the fishing pier. These are alternates.**

32. Bidder question: Allowances 1 and 2 - Security ($290,000) and Security Fiber/Telecom ($100,000) - Section 012100 3.2.A/B. Please provide the Wake County approved vendor list. Section 012100 1.4.B puts receiving, labor, installation, and GC overhead and profit in the Contract Sum outside the allowance, but Allowances 1 and 2 are described as installation by the security subcontractor. Please confirm whether the allowance covers the security subcontractor's full installed price, with only GC markup and coordination outside it. Also confirm the RMA security drawings (WC_Lake Myra Park_Bid Documents_Security, dated July 28, 2026) are a Contract Document. They are not in the SGC drawing list.
    a. **Response: The allowance covers the security subcontractor's full installed price. This will be a separate bid process. The WC Lake Myra Park Bid Documents are provided for information only.**

33. Bidder question: Allowance 3 - Permit Fees ($40,000) - The bid form and 012100 3.2.C limit this to City of Raleigh meter permit fees. SGC Paragraph 7.13 requires the GC to secure and pay for all building permits. Addendum 01 minutes XXVI.e state no building permit fee will be charged. Please confirm: (a) no Wake County building/trade permit fees are to be carried; (b) who pays Town of Wendell site/zoning fees, City of Raleigh capacity/connection fees beyond the meter, NCDOT encroachment fees, and any Duke Energy service or aid-to-construction charges; (c) whether any of those fall under Allowance 3.
    a. **Response: No building permit fees will be charged since the permits are approved by Wake County. The County has paid all the site/zoning fees. The**

711 West North Street
Raleigh, NC 27603
Tel: 919.838.9600
e-mail: jennifer@susanhatchell.com

capacity/connection fees are included in the Permit Fees. No NCDOT Encroachment fees have been identified. The Permit Fee Allowance will be increased from $40,000 to $60,000. See the attached revised Bid Proposal Form.

34. Bidder question: Is allowance number 3 to include costs of building permits as well as meter fees or just meter fees and the GC is to carry building permits separately?
    a. **Response: No building permit fees will be charged since the permits are approved by Wake County**

35. Bidder question: Unit Prices 19-37 - These have no stipulated quantity on the bid form. Please confirm they are for adds/deducts only and are not to be carried in the base bid. For Unit Prices 29/30 (timber pile add/deduct), please state the base pile length or tip elevation the add/deduct is measured from.
    a. **Response: See revised Bid Proposal Form which removes ADD/DELETE from the timber pile unit prices. Refer to timber pile details on the Site Structural Details.**

36. Bidder question: We reviewed Section 033000 and noted the requirement for a PRAH permeability-reducing admixture. We would like to have Barrier One CSXtreme (CSX) evaluated for inclusion as an acceptable product for this requirement.
    a. **Response: The successful bidder should submit product data during the submittal process.**

37. Bidder question: Permits Pending - Addendum 01 minutes VI.b show Eastern Parcel site plan approval (Town of Wendell) still in progress. Erosion control approval is listed for the Western Parcel only. Minutes XXVI.i state the Duke Energy easement will be resolved once construction begins. If any of these are not in place at NTP, will Contract Time (540 days) be adjusted? Does the Duke easement affect any building pad, entrance drive, or utility route?
    a. **Response: The Contract time will not be adjusted. We will work with Duke Energy to avoid any impacts to the building pad, entrance drive or utility route.**

38. Bidder question: Maintenance Facility Early Completion - Section 011000 1.7.D.1 requires the Maintenance Facility and access drive complete at least 4 months before the remaining buildings. Is there a fixed milestone date or separate liquidated damages for this milestone? For CO, must the permanent well and WWTS be operational at that time?
    a. **Response: Delete Section 011000 1.7.D.1 requiring the Maintenance Facility and access drive to be completed at least four months before the remaining buildings. Although this would be preferred, the project schedule will be discussed with the successful bidder. The well and septic will need to be**

Susan
Hatchell
Landscape Architecture, PLLC

711 West North Street
Raleigh, NC 27603
Tel: 919.838.9600
e-mail: jennifer@susanhatchell.com

completed for CO of the buildings on the west parcel.

39. Bidder question: Drawing Index - SGC drawing list shows PC-A430 twice ("Wall Sections" and "Canopy and Downspout Details"). Please confirm the correct sheet numbers. Also confirm the West Parcel WWTS Design Package (Released for Bid) is a Contract Document and within the GC scope. It is not listed in the SGC drawing list.
    a. **Response: Yes, the West Parcel Wastewater Treatment System (WWTS) Design Package is a Contract Document and within the GC scope.**

40. Bidder question: Federal Funds - SGC Article 3 includes federal provisions "if the source of funds for this contract is federal funds." Are any federal or grant funds (e.g., LWCF, PARTF) on this project that would trigger Davis-Bacon wage rates or Build America, Buy America requirements?
    a. **There are no federal or grant funds on this project.**

41. Bidder question: Pollution Legal Liability - SGC 5.1.4 requires a PLL policy ($1M/$2M). Please confirm this is required for all bidders regardless of hazardous material handling. May it be provided by the earthwork/disposal subcontractor, naming the Owner as additional insured?
    a. **Response: Yes, it may be provided by the earthwork/disposal subcontractor.**

42. Bidder question: Trail Building Subcontractor Qualification - Section 130000. Please confirm whether this form is submitted with the bid or only by the apparent low bidder after opening.
    a. **Response: Contractor shall be required to submit these forms with contractor qualifications as part of the submittal process during construction.**

43. Bidder question: Subcontractor Listing - Bid Form (Plumbing, HVAC, Electrical, Site, Other). Please confirm whether dollar amounts are required with each listed subcontractor, and whether the trail builder must be listed under "Other."
    a. **Response: Only Plumbing, HVAC, and Electrical are required. Contractor shall be required to submit the trail building subcontractor Qualification forms with contractor qualifications as part of the submittal process during construction.**

44. Bidder question: What is the black to color ratio for the top layer of the PIP rubber surface on the playground? Standard is 50/50, but sometimes customers want 90/10 or 100% color. The higher the color to black ration, the higher the cost
    a. **Response: The color ratio will be 50/50**

45. Should the contractor assume all boulders called for in the drawings will be procured from the site? Or is there a quantity of boulders we should assumed have to be procured from offsite?

711 West North Street
Raleigh, NC 27603
Tel: 919.838.9600
e-mail: jennifer@susanhatchell.com

a. **Response: Assume all boulders will be procured offsite. If/when boulders are found on site during construction, Contractor will source less from offsite.**

46. Bidder question: If playground equipment installation is on the general contractor we need a list and qty of each type of equipment along with the foundation requirements for each piece. Can these details be provided?
    a. **Response: See the attached product lists for the reclaimed and new play equipment. Not all the equipment on the reclaimed playground list will be installed.**

47. Bidder question: Maintenance Facility & West Parcel: Do the solar PV components, including modules, racking, and inverters, need to comply with FEOC guidelines? This would be a requirement if the end client intends to claim the tax credit. However, in order to do that, the PV system needs to be in service before 12/31/27.
    a. **Response: The Owner, Wake County, does not qualify for tax incentives, therefore no "FEOC" documentation will be required.**

48. Bidder question: Sheet MF-E001 & sheet WS-E102 (Maintenance Facility & West Parcel) We understand that the solar contractor's scope includes all photovoltaic system components, including the modules, inverter, AC disconnect, and all associated conduit and conductors, except for the 40A breaker in the MFP1 for the final connection of the solar PV system.
    a. **Response: The solar voltaic system as detailed on the Drawings and specified in the Project Manual will be provided by the Contractor. It is the prime Contractor's responsibility to coordinate the scope of work provided by various sub-contractors and suppliers to provide the Owner with a complete and operational system.**

49. Bidder question: We understand that this breaker will be provided and installed by the electrical contractor. Please confirm.
    a. **See response above.**

50. Bidder Question: Sheet MF-E102 & sheet WS-E102 (Maintenance Facility & West Parcel) Please confirm the preferred manufacturers for the solar PV modules, inverters, and racking system.
    a. **Response: The Owner's preferred inverter manufacture, and basis of design, is Solar Edge as specified. There are no preferred manufactures for associated collectors and racking system.**

51. Bidder question: Sheet MF-E102 & sheet WS-E102 (Maintenance Facility & West Parcel) Please confirm the preferred manufacturers for the solar PV modules, inverters, and racking system.

711 West North Street
Raleigh, NC 27603
Tel: 919.838.9600
e-mail: jennifer@susanhatchell.com

a. **Response: The solar panel support system shall be fully compatible with the panels provided and coordinated with standing seam metal roofing system provided.**

52. Bidder question: Please confirm if prevailing wage or Davis-Bacon applies to this project.
    a. **Response: No Davis Bacon requirements apply.**

53. Bidder question: Substitution Request - Section 263100 – Photovoltaic Collectors, c 2.03 Photovoltaic Modules. Proposed Module: Hyundai Solar HiN-T595NI – 595W
    a. **Response: The Hyundai Solar HiN-T595NI – 595W is an acceptable solar panels.**

54. Bidder question: Allowance 5 - BDA System - 012100 3.2.E covers devices only (2 exit signs, 2 emergency lights, 2 horn/strobes, 8 monitor modules). Please confirm the BDA/ERRCS system itself (radio coverage survey, amplifier, donor antenna, cabling) is NOT in the base bid, and who provides it if required.
    a. **Response: There is no BDA/ERRCS system included in the scope of work. If field testing dictates that a system is required, the County will contract for it separately.**

55. Bidder question: Wooten Company Addendum No. 01 - Issued within Addendum 01 (9/18/26) but dated 09/26/2026. Please confirm the correct date for acknowledgment on the bid form. Also confirm the "ES-201" reference means ES-E201. Please also confirm the detail reference on MF-E001 (detail 1/WS-E001) is correct.
    a. **Response: Date shown on electrical cover for Addendum 1 was not correct.**

56. Bidder question: On sheet PC-M401 there appears to be a BAS system however there are no BAS specifications. Please advise.
    a. **Response: Missing BAS specification has been included in Addendum #3**

57. Bidder question: Do any of the buildings require a BAS interface?
    a. **Response: Missing BAS specification has been included in Addendum #3**

58. Bidder question: East shelter feeder: MF-E001 depicts a 100A feed to EPSP with 3#4, #6G in 1" conduit, while MF-E101 shows a 150A three-pole breaker with 4-1/0, #6G in 1-1/2" conduit and ES-E301 schedules a 150A MCB panel. Which breaker, conductor/neutral/ground set, raceway, and panel rating govern?
    a. **Response: Feeder from MFP1 to EPSP shall be 4#1/0, #6G in 1-1/2" C.**

59. Bidder question: Maintenance PV: MF-E102 calls for 28 x 340W modules on the roof but shows two 16-module strings of 345W panels in the riser. Confirm module count, wattage, string layout, and inverter size

711 West North Street
Raleigh, NC 27603
Tel: 919.838.9600
e-mail: jennifer@susanhatchell.com

a. **Response: Photovoltaic systems shall be rated for 10kva, panel arrays provided shall have a total capacity to provide nominally 10kva to inverters.**

60. Bidder question: PV AC connections: Addendum 1 calls for 3#8 and #8G in 3/4" conduit at MFP1 and WPS, while the original PV diagrams show 4#8 and #10G in 1" conduit. Confirm whether a neutral is required, plus final conductor, breaker, conduit, and disconnect sizes on coordinated revised sheets
    a. **Response: Basis of design does not require a neutral, 3#8 and #8G in 3/4"**

61. Bidder question: Communications routes: Addendum 1 routes East gate/camera communication conduits to the Park Center lower-level comm room and changes the East gate conduit to 2". Please show final routes, conduit quantities and handholes; confirm whether the West gate's 1" conduit on WS-E401 also changes and identify any inter-parcel or carrier entrance scope.
    a. **Response: Locations of hand holes and raceway are indicated on electrical site plans.**

62. Bidder question: provide the final Duke service/transformer locations and requirements
    a. **Response: Utility provided pad mounted transformer locations are indicated on the drawings. Primary service delivery shall be provided by Utility. Contactor to provide transformer pad and all secondary service provisions.**

63. Bidder question: Fire alarm: PC-E001 note R describes boxes and conduit stubs at devices, but 28 46 00 and PC-E402 describe a complete fire alarm system. Is our bid to include a turnkey fire alarm subcontract or only rough-in and 120V power with a separate vendor? Who carries programming, permits, and acceptance?
    a. **A complete fire alarm system shall be provided by the Contractor in the Park Center facility. This includes all programming and permits and coordination with AHJ for acceptance.**

64. Bidder question: Is the BDA equipment and wiring to be carried by the contractor on the Park Center? Or only the devices listed as allowances?
    a. **Response: There is no BDA system included in the scope of work. If field testing dictates that a system is required, the County will contract for it separately.**

65. Bidder question: Gate and food-truck equipment: ES-E201/WS-E201 show gate power/control and 50A pedestals but identify differing receptacle voltages. Confirm pedestal quantities, voltage/NEMA configuration, basis-of-design equipment, foundations, and whether the gate operator, loops, controls, and hot-box equipment are furnished by the gate/security vendor or our trade.
    a. **Response: There are a total of four food truck outlet pedestals, one on the west parcel and three on east parcel. All will be rated for 50A at 120/208V.**

711 West North Street
Raleigh, NC 27603
Tel: 919.838.9600
e-mail: jennifer@susanhatchell.com

Pedestals shall be Pedoc # 148-C-HT-B or equal

66. Bidder question: LED handrail: PC-E201 calls for LED-lighted handrail connections and battery backup on PCB-25. Who furnishes the LED assembly, drivers and backup unit, and what is the illuminated length/connection count?
    a. **It is anticipated that LED array and driver/power supply are provided with hand railing system. Contractor to provide a connection to each handrail and battery back-up(s) sufficient to support wattage installed.**

67. Bidder question: Site light poles: Confirm who furnishes and installs complete L1/L2 pole/fixture assemblies, anchor bolts, concrete bases, conduit, handholes, and site-lighting controls on each parcel. Are any poles or luminaires owner-furnished?
    a. **Response: Panels will not be flush with roof, panel angle to be adjusted to optimum solar angel per spec section 26 31 00, 2.04.A.3.a**

68. Bidder question: PV roof/interconnection: For the Maintenance Facility and West Shelter systems, confirm responsibility for roof attachment/structural design, flashing/warranty, utility interconnection and metering, monitoring data service, and commissioning. Is the specified SolarEdge/optimizer basis mandatory?
    a. **Response: The Owner's preferred inverter manufacture, and basis of design, is Solar Edge as specified. There are no preferred manufactures for associated collectors and racking system. Photovoltaic systems shall be rated for 10kva, panel arrays provided shall have a a total capacity to provide nominally 10kva to inverters.**

69. Bidder question: Electrical general notes require low-voltage cables installed within walls or inaccessible spaces to be installed in metal raceway and permit cable tray where noted. Other contract documents indicate cable tray, J-hooks, and conduit stub-ups for portions of the security and telecommunications systems. Please identify where a complete raceway system is required and where cable tray or J-hook-supported open cabling is permitted
    a. **Response: Conduit for these systems will be required in all buildings except Park Center where crawl space may be considered accessible and J-hooks and/ or cable tray may be used.**

70. Bidder question: Addendum No. 1 establishes the communication handhole size as 13 inches by 24 inches by 18 inches deep. Please provide the required loading classification, handhole material, cover type and marking, grounding requirements, and whether these handholes are permitted in vehicular areas
    a. **Response: Location of hand holes are not indicated in areas of vehicular traffic. Hand holes shall be Quazite No. PG1324DA18 or equal with 8000lb cover rating**

Susan Hatchell
Landscape Architecture, PLLC

711 West North Street
Raleigh, NC 27603
Tel: 919.838.9600
e-mail: jennifer@susanhatchell.com

71. Bidder question: Please provide the installation requirements for underground security, fiber-optic, and telecommunications conduits, including minimum burial depth, locations requiring concrete encasement, separation from power systems, warning tape, tracer wire, and spare-conduit requirements
    a. **Response: Raceway sizes and locations shall be as indicated on drawings, underground raceway installation shall be per specifications, concrete encasement only required in areas subject to vehicular traffic.**

72. Bidder question: The drawings indicate photovoltaic array quantities and Addendum No. 1 establishes the AC feeder conductors and breakers; however, the photovoltaic modules, complete DC design, mounting system, rapid-shutdown equipment, monitoring connection, and utility-interconnection requirements are not fully identified. Please provide the basis-of-design module and inverter configuration, array/string design, required roof attachments, monitoring connection and pathway, and utility interconnection and commissioning requirements for each system.
    a. **Response: Photovoltaic system performance and installation to be per spec section 26 31 00. The Owner's preferred inverter manufacture, and basis of design, is Solar Edge as specified. There are no preferred manufactures for associated collectors and racking system. Photovoltaic systems shall be rated for 10kva, panel arrays provided shall have a total capacity to provide nominally 10kva to inverters.**

73. Bidder question: Please identify the required supervising-station communication method for the fire alarm system and provide the service point and pathway requirements. Confirm whether cellular, network, radio, or other communication service is required and interface locations
    a. **Response: Fire Alarm system shall include automatic digital alarm communicator with four channel dual line communication to central monitoring station via IP or cellular network.**

74. Bidder question: Specification 26 21 00.01 states that the pad-mounted transformer and primary wiring are provided by Duke Energy and that the transformer pad is provided by the Contractor. Please confirm responsibility for primary conduit, trenching, excavation, backfill, concrete encasement, transformer grounding, bollards, inspections, and utility charges at each service location
    a. **Response: Beyond the coordination requirements indicated in section 26 21 00, the Contractor is not responsible for installation the Utility primary service delivery to utility transformers.**

75. Bidder question: Specification 26 05 73 provides general requirements for power system studies but does not identify the individual studies required. Please confirm whether short-circuit, protective-device coordination, arc-flash hazard, selective-coordination,

711 West North Street
Raleigh, NC 27603
Tel: 919.838.9600
e-mail: jennifer@susanhatchell.com

and equipment-duty studies are required, and identify the buildings and distribution equipment to be included

a. **Response: A coordination study is required on entire electrical distribution systems. Available fault currents shall be indicated on all service panels and control panels. Labels indicating arc-fault levels and PPE requirements will be provided on all panels and control panels.**

76. Bidder question: Do the solar PV components, including modules, racking, and inverters, need to comply with FEOC guidelines? This would be a requirement if the end client intends to claim the tax credit. However, in order to do that, the PV system needs to be in service before 12/31/27.
    a. **Response: The Owner, Wake County, does not qualify for tax incentives, therefore no "FEOC" documentation will be required.**

77. Bidder question: Is there a domestic content requirement for the solar PV scope? If so, please confirm the required percentage.
    a. **Response: There are no required minimum domestic content requirements for the solar PV system.**

78. Bidder question: We understand that the solar contractor will provide Ethernet cable to the nearest network switch or the IT room. The controls contractor will be responsible for the PV system's integration with the BAS. Please confirm if this approach is acceptable. Also, is the communication protocol Modbus or BACnet? If it is BACnet, the Solar Contractor needs to provide a converter, or would that be the responsibility of the controls contractor as well? We are asking this question because solar inverters are Modbus-compatible; therefore, if the required protocol is BACnet, a converter will be required.
    a. **Response: This understanding is correct. Modbus communication protocol will be accommodated by the BAS system.**

79. Bidder question: The roof plan shows row spacing between the solar modules. Since the modules are shown as flush-mounted, we understand that row spacing is not required. Please confirm if the indicated spacing can be removed.
    a. **Response: Panels will not be flush with roof, panel angle to be adjusted to optimum solar angel per spec section 26 31 00, 2.04.A.3.a**

80. Bidder question: The roof plan shows the solar modules in landscape orientation. Please confirm if portrait orientation is also acceptable.
    a. **Response: Panel orientation and mounting angle to be adjusted to optimum solar performance per spec section 26 31 00, 2.04.A.3.a**

Susan
Hatchell
Landscape Architecture, PLLC

711 West North Street
Raleigh, NC 27603
Tel: 919.838.9600
e-mail: jennifer@susanhatchell.com

81. Bidder question: Please confirm the preferred manufacturers for the solar PV modules, inverters, and racking system.
    a. **Response: The Owner's preferred inverter manufacture, and basis of design, is Solar Edge as specified. There are no preferred manufactures for associated collectors and racking system**

82. Bidder question: Please confirm if an S-5! clamp with IronRidge rails is acceptable for the solar mounting system.
    a. **There are no preferred manufactures for associated collectors and racking system.**

83. Bidder question: Please confirm whether consumption monitoring is required on this project. (Referring to solar PV scope)
    a. **Response: Yes, per requirements of specification section 26 31 00**

Susan Hatchell
Landscape Architecture, PLLC

711 W. North Street
Raleigh, NC 27603
Tel: 919.838.9600
e-mail: jennifer@susanhatchell.com

Lake Myra County Park Phase 1 - Plan Holders List

Updated: September 29, 2026

Wake County
Eric Staehle, PLA, ASLA
Senior Facilities Project Manager
Wake County
Facilities Design & Construction
Bus: 919.856.6369
eric.staehle@wake.gov

Susan Hatchell Landscape Architecture, PLLC
Jennifer Steed, Senior Project Manager
711 W. North Street
Raleigh, NC 27603
Bus: (919) 838-9600
jennifer@susanhathell.com

Accent Imaging
8121 Brownleigh Drive
Raleigh, NC 27617
Bus: (919) 782-3332
www.planscope.com

Carolinas AGC, Inc. / HCAC ISQFT / CMD Group
www.cmdgroup.com
Bus: (800) 424-3996
docprocessing@cmdgroup.com

McGraw-Hill Construction / Dodge Data & Analytics
www.construction.com
Bus: (877) 784-9556
support@construction.com

Hispanic Contractors Association of the Carolinas
www.hcacarolinas.org
Bus: (704) 583-4184
info@hcacarolinas.org

NC Institute of Minority Economic Development
www.theinstitutenc.org
Bus: (919) 956-8889
info@TheInstituteNC.org

Metrolina Minority Contractors Association
www.mmcaofcharlotte.org
Bus: (877) 526-6205
mmca@mmcaofcharlotte.org

Daniels and Daniels Construction Co., Inc.
Chris May, Estimator
Bus: (919) 778-4525
www.danddcc.com
estimating@danddcc.com

Muter Construction
Cindy Cayton, Preconstruction Coordinator
Bus: (919) 404-8330
www.muterconstruction.com
ccayton@muterconstruction.com

C.T. Wilson Construction Co., Inc.
Tim Carter, Senior Estimator
Bus: (919) 383-2535
www.ctwilson.com
Tim.Carter@ctwilson.com

MEC Environmental Construction, Inc.
Jordan Garcia, Business Development
Office: 919.475.2971
https://www.MECBuild.com
jgarcia@mecbuild.com

G and G Builders, Inc.
Justin Jackson
919.669.2425
justin@ggbuildersnc.com

HG Reynolds Co., Inc
Marty Wells
804.895.2091
mwells@hgreynolds.net

Browe Construction
Emma Elliott
984.989.3973
Emma.elliott@browecon.com

Crowder Construction
Nick Vilaret
727.560.3166
nvilaret@crowderusa.com

Omer G Ferrell & Son Grading
Neil Barnhill
919.868.1155
neil@omerferrell.com

TCC Enterprises
Damon Jones
919-922-7568
damon@tccenterprises.com

Dickerson Infrastructure
Benjamin Reynolds
336.244.9062
breynolds@dfifl.com

Stigarsh Maintenance LLC
Festus Garshong
919.928.7556
Stigarshmaintenancellc@gmail.com

Maxson Associates
Keith Knolmayer
336.403.3356
Kknolmayer@maxsonassociates.com

Fred Smith Company
Brooks Bass
919.332.1337
bbass@fredsmithcompany.net
Carl Collie
919.901.8225
ccollie@fredsmithcompany.net

J.M. Thompson Company
Dominic Saquian
919.777.4635
dsaquian@jmthompson.com

Sanford Contractors
Zach Jett
910.649.1034
zjett@sanfordcontractors.com
Drake Howard
910.824.6050
dhoward@sanfordcontractors.com

Bar Construction
Josh Flynn
336.274.2477
bids@barconstruction.com

Clancy & Theys
Soere Teme
919.801.9400
soereteme@clancytheys.com

Harrod and Assoc. Constructors, Inc.
Ed Long
919.828.7782
elong@harrodandassoc.com

Group III Mgt.
Trent King
252-526-7546
tking@groupiiimgt.com

LAKE MYRA COUNTY PARK PHASE 1

Project No. RFB# 26-077

BID PROPOSAL FORM

SINGLE PRIME GENERAL CONSTRUCTION WORK
FORMAL CONTRACT

BIDDER'S NAME

_____ License Number: _____

BASE BID PROPOSAL

The undersigned, as Bidder, hereby declares that the only person or persons interested in this Proposal as principal or principals is or are named herein and that no other person than herein mentioned has any interest in this Proposal or in the Contract to be entered into; that this Proposal is made without connection with any other person, company or parties making a Bid or Proposal; and that it is in all respects fair and in good faith without collusion or fraud.

The Bidder further declares that he has examined the site of the work and informed himself fully in regard to all conditions pertaining to the place where the work is to be done; that he has examined the specifications for the work and the Contract Documents relative thereto, including addenda, if any, and has read all special provisions furnished prior to the opening of bids; that he has satisfied himself relative to the work to be performed.

The Bidder proposes and agrees if this Proposal is accepted to contract with the County of Wake with a definite understanding that no money will be allowed for extra work except as set forth in the General Conditions and Contract Documents, for the sum of:

Base Bid _____

_____ Dollars ($_____).

SUBCONTRACTOR LISTING

PLUMBING CONTRACTOR

Name: _____ License Number: _____

$_____

HVAC CONTRACTOR

Name: _____ License Number: _____

$_____

ELECTRICAL CONTRACTOR

Name: _____ License Number: _____

$_____

SITE CONTRACTOR

Name: _____ License Number: _____

$_____

(OTHER CONTRACTOR)

Name: _____ License Number: _____

$_____

(OTHER CONTRACTOR)

Name: _____ License Number: _____

$_____

(OTHER CONTRACTOR)

Name: _____ License Number: _____

$_____

ALTERNATES

Should any of the alternates as described in the specifications be accepted, the amount written below shall be the amount to "add to" of "deduct from" the Base Bid. If to be "deducted from" Base Bid, put minus sign (-) in parentheses at head of alternate and plus sign (+) in parentheses if to be added. Refer to Section 012300 “Alternates” for description of alternates.

Alternate No. 1 Boardwalk A across Lake Myra ADD Dollars ($ _____)

Alternate No. 2 Boating Access ADD Dollars ($ _____)

Alternate No. 3 Fishing Pier ADD Dollars ($ _____)

UNIT PRICES

Unit prices are complete for labor, equipment, material, overhead and profit. Base bid includes the stipulated allowance quantity of each item. Unused amount will be credited to the Owner by change order at the end of the project.

No.	Description	Unit Price	Unit Measure	Allowance Units
1	Access Door for Hard Ceilings		Each	
2	Exit Sign		Each	
3	Emergency Light		Each	
4	Fire Alarm Horn/Strobes		Each	
5	Fire Alarm Monitor Modules for Potential BDA System		Each	
6	Unsuitable Soil – On-Site Disposal and Backfill with On-Site Source Suitable Soils		CY	100
7	Unsuitable Soil – On-site disposal and Backfill with Off-Site Source Suitable Soils		CY	250
8	Unsuitable soil – Off-site disposal and Backfill with On-Site Source Suitable Soils		CY	50
9	Unsuitable Soil – Off-site disposal and Backfill with Off-Site Source Suitable Soils		CY	250
10	Mass Rock Excavation and Replacement with Imported Structural Fill		CY	200
11	Trench Rock Excavation and Replacement with Imported Structural Fill		CY	150
12	Erosion Control Matting		SY	500
13	Engineered Geotextile Fabric		SY	500
14	#57 Drainage Stone		CY	50
15	6" Perforated PVC Drainage Pipe (French Drain)		LF	50
16	Trail Pipe Crossing – 12 Inch RCP		LF	75
17	Trail Pipe Crossing – 15 Inch RCP		LF	50
18	Trail Pipe Crossing – 18 Inch RCP		LF	50

19	Clearing and Stump Removal		Acre	
20	Selective Tree Removal – 2”-6” caliper, cut stump flush		Each	
21	Selective Tree Removal – 6”-15” caliper, cut stump flush		Each	
22	Selective Tree Removal – greater than 15” caliper, cut stump flush		Each	
23	Silt Fence		LF	
24	Tree Protection Fence (TPF)		LF	
25	Concrete Paving – 4-inches thick		SY	
26	Concrete Paving – 6-inches thick		SY	
27	Concrete Curb and Gutter		LF	
28	Asphalt Paving		Ton	
29	Timber Pile – Longer Timber Pile		LF	
30	Timber Pile – Shorter Timber Pile		LF	
31	Trail Boardwalk – Wood (10' Clear)		LF	
32	Trail Boardwalk – Composite (10' Clear)		LF	
33	Trail Boardwalk 10’ x 10’ Crossing		LF	
34	Canopy Tree – 2” caliper, B&B		Each	
35	Understory Tree – 8’ height, B&B		Each	
36	Seeding		SY	
37	Triple Shredded Hardwood Mulch		CY	

ALLOWANCES

Allowances indicated shall be included in the Total Base Bid Amount. Refer to Section 012100 for description of allowances

A. Allowance No. 1: Include a lump sum allowance of **$290,000.00** for Security Equipment and Installation

B. Allowance No. 2: Include a lump sum allowance of **$100,000.00** for Security Fiber Optic and Telecommunications Cabling Installation

C. Allowance No. 3: Include a lump sum allowance of **$60,000.00** for Raleigh meter permit fees

D. Allowance No. 4: Include a unit cost allowance for providing and installing two (2) access doors for hard ceilings, per Unit Price No. 1 $_____

E. Allowance No. 5: Include a unit cost allowance for providing and installing two (2) exit signs, two (2) emergency lights, two (2) fire alarm horn/strobes, and eight (8) fire alarm monitor modules for potential BDA System, per Unit Price No. 2, 3, 4, and 5 $_____

F. Allowance No. 6: Include an allowance of 100 CY for unsuitable soil with on-site disposal and backfill with on-site source suitable soils, per Unit Price No. 6 $_____

G. Allowance No. 7: Include an allowance of 250 CY for unsuitable soil with on-site disposal and backfill with off-site source suitable soils, per Unit Price No. 7 $_____

H. Allowance No. 8: Include an allowance of 50 CY for unsuitable soil with off-site disposal and backfill with on-site source suitable soils, per Unit Price No. 8 $_____

I. Allowance No. 9: Include an allowance of 250 CY for unsuitable soil with off-site disposal and backfill with off-site source suitable soils, per Unit Price No. 9 $_____

J. Allowance No. 10: Include an allowance of 200 CY for mass rock excavation and replacement with imported structural fill, per Unit Price No. 10 $_____

K. Allowance No. 11: Include an allowance of 150 CY for trench rock excavation and replacement with imported structural fill, per Unit Price No. 11 $_____

L. Allowance No. 12: Include an allowance of 500 SY for erosion control matting, per Unit Price No. 12 $_____

M. Allowance No. 13: Include an allowance of 500 SY for engineered geotextile fabric, per Unit Price No. 13 $_____

N. Allowance No. 14: Include an allowance of 50 CY for #57 drainage stone, per Unit Price No. 14 $_____

O. Allowance No. 15: Include an allowance of 50 LF for 6" perforated PVC drainage pipe (French Drain), per Unit Price No. 15 $_____

P. Allowance No. 16: Include an allowance of 75 LF for 12” RCP trail pipe crossing, per Unit Price No. 16 $_____

Q. Allowance No. 17: Include an allowance of 50 LF for 15” RCP trail pipe crossing, per Unit Price No. 17 $_____

R. Allowance No. 18: Include an allowance of 50 LF for 18” RCP trail pipe crossing, per Unit Price No. 18 $_____

S. Allowance No. 19: Include an allowance of **$250,000.00** for Project Contingency Allowance.

CERTIFICATION OF PROPOSER:

The Bidder further proposes and agrees hereby to commence work under his Contract on a date to be specified in a written order of Wake County and shall fully complete all work thereunder within the number of consecutive calendar days stipulated in the Supplementary General Conditions. Applicable liquidated damages shall be as stated in Supplementary General Conditions.

The undersigned acknowledges receipt of the following addenda issued during the time of bidding and includes the changes therein in this Proposal:

Addendum Number _____, Dated _____

Addendum Number _____, Dated _____

Addendum Number _____, Dated _____

Addendum Number _____, Dated _____

The undersigned agrees that this Proposal will not be withdrawn for a period of sixty (60) days.

The undersigned agrees to comply with the E-Verify requirements of the General Statutes of North Carolina, all contractors, including any subcontractors employed by the contractor(s), by submitting a bid, proposal or any other response, or by providing any material, equipment, supplies, services, etc., attest and affirm that they are aware and in full compliance with Article 2 of Chapter 64, (NCGS64-26(a)) relating to the E-Verify requirements.

The undersigned agrees not to discriminate in any manner on the basis of race, natural hair or hairstyles, ethnicity, creed, color, sex, pregnancy, marital or familial status, sexual orientation, gender identity or expression, national origin or ancestry, marital or familial status, pregnancy, National Guard or veteran status, religious belief or non-belief, age, or disability with reference to the subject matter of this Contract. The Parties agree to comply with the provisions and intent of Wake County Ordinance SL 2017-4. This anti-discrimination provision shall be binding on the successors and assigns of the Parties with reference to the subject matter of this Contract.

The undersigned further agrees that in the case of failure on his part to execute the said Contract and the Bond within ten (10) consecutive calendar days after written notice being given of the award of the Contract, the check, cash or Bid Bond accompanying this Bid shall be paid into the funds of Owner's Account set aside for this Project, as liquidated damages for such failure; otherwise the check, cash or Bid Bond accompanying this Proposal shall be returned to the undersigned.

Respectfully submitted this __ day of _____, 20__

PROPOSER SIGNATURE PAGE

_____
(Name of Firm or Corporation making Bid)

By: _____

WITNESS:

_____
(Proprietorship or Partnership)

Title: _____
(Owner, Partner, or Corporation President or Vice President only)



Address: _____
_____
_____

Affix Corporate Seal Above

License Number: _____

ATTEST:

By: _____

Title: _____
(Corporation Secretary or Assistant Secretary only)

Project Title: Lake Myra County Park East & West Playgrounds

Location: Wake County NC 27511

NEW EQUIPMENT

PlayBooster (2-5 years)						
PHASE-1 Direct Bury Mixed Material			UNIT		TOTAL	
QTY	NO.	DESCRIPTION	WEIGHT (lb)		WEIGHT (lb)	
PlayBooster®						
Posts						
3	111403T	110"Steel Post For Roof DB	63.0		189.0	
2	111403R	126"Steel Post For Roof DB	73.0		146.0	
1	111403N	158"Steel Post For Roof DB			91.0	
Roofs						
1	212256A	Flower Accent Topper			83.0	
1	212256A	Flower Accent Topper			83.0	
1	212256A	Flower Accent Topper			83.0	
1	212256A	Flower Accent Topper			83.0	
1	212256A	Flower Accent Topper			83.0	
1	212256A	Flower Accent Topper			83.0	
Freestanding Play						
Climbers						
2	173908A	Log Stepper 18"Height DB Only	244.0		488.0	
1	173907A	Log Stepper 8"Height DB Only			155.5	
Custom						
1	CP026322	Ladybug DigiRider® -sit in style DB Perm Seat, component color = spring			104.3	
Sensory Play						
1	173594A	Log Crawl Tunnel DB Only[1]			2010.0	
Shade						
2	237673B	SkyWays Cantilever Single Post Pyramid 12'x12' Shade 10' Entry Height[1]	345.0		690.0	
Sports & Fitness						
1	173596A	Log Balance Beam DB[1]			455.0	

PlayBooster (5-12 years)						
PHASE-1 Direct Bury Aluminum			UNIT		TOTAL	
QTY	NO.	DESCRIPTION	WEIGHT (lb)		WEIGHT (lb)	
PlayBooster®						
Motion & More Fun						
1	166809A	E-Pod Seat			11.0	
Posts						

Project Title: Lake Myra County Park East & West Playgrounds

Location: Wake County NC 27511

NEW EQUIPMENT

PlayBooster (5-12 years)						
PHASE-1 Direct Bury Aluminum			UNIT		TOTAL	
QTY	NO.	DESCRIPTION	WEIGHT (lb)		WEIGHT (lb)	
1	111404F	108"Alum Post DB			28.0	

PlayBooster (5-12 years) (2)						
PHASE-1 Direct Bury Mixed Material			UNIT		TOTAL	
QTY	NO.	DESCRIPTION	WEIGHT (lb)		WEIGHT (lb)	
PlayBooster®						
Bridges & Ramps						
2	171539A	Ramp Deck Extension DB 16"Dk	54.0		108.0	
Climbers W/Permalene Handholds						
1	363635B	BeltSwoop Climber w/Permalene Handholds w/Cable Surrounds			273.0	
Custom						
1	CP012129	10' x 5' Hill Net climber for 4ft Elevation DB Using PB Half clamps for 4ft elevation. Includes clamps, hardware, and 6-7 ga steel ground level posts.			545.0	
17	CP005466A	DTR PB Double Curved Tube Post Topper	18.0		306.0	
Motion & More Fun						
1	166809A	E-Pod Seat			11.0	
2	120818A	Playstructure Seat	26.0		52.0	
1	111362A	Talk Tube 40' Tubing Kit PB			15.0	
Posts						
5	111403T	110"Steel Post For Roof DB	63.0		315.0	
4	111404Q	116"Steel Post DB	70.0		280.0	
6	111403R	126"Steel Post For Roof DB	73.0		438.0	
1	111404C	132"Alum Post DB			31.0	
1	111403D	158"Alum Post For Roof DB			36.0	
6	111403N	158"Steel Post For Roof DB	91.0		546.0	
2	154883F	301"Steel Post (72" Bury) For CoolTopper Single Post Pyramid Roof	253.0		506.0	
4	111404I	84"Alum Post DB	21.0		84.0	
Roofs						

Project Title: Lake Myra County Park East & West Playgrounds

Location: Wake County NC 27511

NEW EQUIPMENT

PlayBooster (5-12 years) (2)						
PHASE-1 Direct Bury Mixed Material			UNIT		TOTAL	
QTY	NO.	DESCRIPTION	WEIGHT (lb)		WEIGHT (lb)	
2	154884A	CoolToppers Single Post Pyramid Roof DB Only[1]	145.0		290.0	
Slides						
1	120424A	Ribbon Slide 40"Dk DB			76.0	
1	123333A	Rollerslide 40"Dk DB			364.0	
Freestanding Play Climbers						
4	120711A	Pod Climber 16" DB	14.0		56.0	
1	158998A	Pod Climber 20" DB			15.0	
3	120710A	Pod Climber 8" DB	12.0		36.0	
1	160418A	The Peak Rock Climber[1]			3045.0	
Custom						
1	CP000492A	DTR IND Hillscape Wide Top Climber Mink			834.0	
1	CP002028	GFRC Mushroom table - 4ft diameter DB 48in diameter cap - designed for 28-30i height table - 24i clear underneath for ADA			1247.8	
1	CP032087	Rope Pull Climber for 36" elevation hill DB Approximately 7'-5" long in plan. Includes clamps, 1 PB Post and 3 roto knots.			37.0	
11	CP001153	Single Hill Loop, 36"OC DB .	22.9		251.6	
Motion & More Fun						
1	247179A	Curva Spinner DB Only			117.0	
1	173591A	OmniSpin Spinner Surface Mount[1]			499.0	
2	158105A	Wobble Pod DB Only	122.0		244.0	
Sensory Play						
1	158106A	Chatter Noodle DB Only			52.0	
1	168099A	Cozy Dome DB			247.0	
Shade						
2	237673B	SkyWays Cantilever Single Post Pyramid 12'x12' Shade 10' Entry Height[1]	345.0			
Site Furnishings						
3	186579A	Acorn Seat DB	126.0			

Project Title: Lake Myra County Park East & West Playgrounds

Location: Wake County NC 27511

NEW EQUIPMENT

SUMMARY		CONCRETE (cu-ft)	FOOTINGS (count)	LABOR (hours)	WEIGHT (lb)	
PlayBooster (2-5 years) PHASE-1		24.0	16	9.8	4,826.8	
Total Safety Zone Area = 6274 sq. ft.						
PlayBooster (5-12 years) PHASE-1		1.9	1	1.3	39.0	
Total Safety Zone Area = 6274 sq. ft.						
PlayBooster (5-12 years) (2) PHASE-1		360.2	98	102.0	12,025.4	
Total Safety Zone Area = 6274 sq. ft.						
ALL PHASES	PlayBooster®	269.6	50	78.5	5,239.0	
	Freestanding Play	116.5	65	34.5	11,652.1	
	Total	386.1	115	113.0	16,891.2	

- Square Footage calculation provided by LSI is approximate and for estimation purposes only. LSI shall not be held liable for any costs, damages or requirements related to surfacing applications and/or site or subsurface preparation by third parties.
- Estimated labor-hours do not include hours for custom product installation and/or site or subsurface preparation – or errors in square footage calculations prepared by third parties.
- [1] Any Quote or products that have a total weight above 5,000 lbs shall require a freight quote. Freight tables cannot be used. Custom freight quotes are valid for thirty (30) days and are subject to changes set by the carrier. Unless stated otherwise or in any separate custom freight quote related to this Quote, all prices are FOB Origin (Delano, Minnesota or Dallas, TX).
- **SKYWAYS Product:**
  1. A separate freight quote due to shipping from the Dallas SkyWays facility is required.
  2. This quote doesn't specify concrete requirements or labor hours for installation of SkyWays products. Contact Landscape Structures or refer to the Installation Instructions for details.
- [1] The quoted price is protected for thirty (30) days if a Complete Order is placed prior to a price change effective date. A product order is a "Complete Order" if entered in the applicable LSI software portal and includes final product, colors, artwork and specifications identified, which is fully ready for LSI manufacturing within normal lead times.
- Manufacturing time for this project will be 12 weeks from the time of LSI's order acceptance.
- View additional quote terms here.

landscape structures®

Invoice **INV-006429**

Line	P & M Code	Item #	Description	Product Line	Quantity	Unit of Measure
1.0	A	111685	**PLAYBOOSTER PLAYGROUND**	50	1.00	EA
	PLAYBOOSTER PLAYGROUND					
2.0	A	189313	**Rushwinder**	50	1.00	EA
	Description: DB Left, Clamps/Ball Connectors: 317 Limon, Play Components: 001 Blue, Footers: 317 Limon, Slides/Tunnels/Gliders/E-Pods™: 317 Limon					
3.0	A	193170	**LolliLadder**	50	1.00	EA
	Description: LolliLadder, Clamps/Ball Connectors: 317 Limon, Play Components: 001 Blue, Primary Disc Color: 317 Limon					
4.0	A	184489	**Overhead Trekker Ladder**	50	1.00	EA
	Description: Overhead Trekker Ladder w/o Deck Connections DB, Clamps/Ball Connectors: 317 Limon, Play Components: 001 Blue, Primary Disc Color: 317 Limon					
5.0	A	165575	**123" Disc Challenge w/Handloops**	50	1.00	EA
	Description: 123"Disc Challenge w/Handloops Equal Decks Attached To 16"Dk DB, Clamps/Ball Connectors: 317 Limon, Play Components: 001 Blue, Primary Disc Color: 317 Limon, Secondary Disc Color: 317 Limon, Barriers/Ladders/Benches: 166 Gray					
6.0	A	201545	**Blender PB**	52	1.00	EA
	Description: Direct Bury, Clamps/Ball Connectors: 317 Limon, Play Components: 001 Blue					
7.0	A	111357	**Chinning/Turning Bar**	50	1.00	EA
	Description: Chinning Bar Alum DB, Posts/Arches: 171 Graphite, Clamps/Ball Connectors: 317 Limon, Barriers/Ladders/Benches: 166 Gray					
8.0	A	193174	**Sol Spinner**	50	1.00	EA
	Description: DB, Clamps/Ball Connectors: 317 Limon, Play Components: 001 Blue					
9.0	A	193169	**Netplex 14-Post DB Only**	50	1.00	EA
	Description: Netplex 14-Post No Roof, Posts/Arches: 171 Graphite, Clamps/Ball Connectors: 317 Limon, Roofs: 319 Tangerine, Upper Roofs:					

Continued on next page

landscape structures®

Invoice **INV-006429**

Line	P & M Code	Item #	Description		Product Line	Quantity	Unit of Measure
10.0	A	193175	**Skyport Climber DB Only**	50	1.00	EA	
	Description: Skyport Climber for 14–Post Mainstructure DB Only, Clamps/Ball Connectors: 317 Limon						
11.0	A	111404	**Post**	50	2.00	EA	
	Description: DB for 32"Deck 108"Alum Post, Posts/Arches: 171 Graphite						
12.0	A	111404	**Post**	50	1.00	EA	
	Description: DB for 40"Deck 116"Alum Post, Posts/Arches: 171 Graphite						
13.0	A	111404	**Post**	50	1.00	EA	
	Description: DB for 48"Deck 124"Alum Post, Posts/Arches: 171 Graphite						
14.0	A	111404	**Post**	50	3.00	EA	
	Description: DB for 56"Deck 132"Alum Post, Posts/Arches: 171 Graphite						
15.0	A	111404	**Post**	50	1.00	EA	
	Description: DB for 56"Deck 132"Steel Post, Posts/Arches: 171 Graphite						
16.0	A	111404	**Post**	50	1.00	EA	
	Description: DB for 64"Deck 140"Steel Post, Posts/Arches: 171 Graphite						
17.0	A	146007	**BIT 5/16 6–LOBE T–45 TAMP**	60	3.00	EA	
	BIT 5/16 6–LOBE T–45 TAMP						
18.0	A	146017	**KEY 5/16i 6–LOBE T–45**	60	3.00	EA	
	KEY 5/16i 6–LOBE T–45						
19.0	A	115176	**LABEL HD SRF WARNING ASTM**	60	4.00	EA	
	LABEL HD SRF WARNING ASTM						
20.0	A	182212	**LABEL ENTANGLEMENTWARNING**	60	4.00	EA	
	LABEL ENTANGLEMENTWARNING						
21.0	A	182213	**LABEL HOT SURFACE WARNING**	60	4.00	EA	
	LABEL HOT SURFACE WARNING						
22.0	A	156847	**LABEL PLAY SAFE 5–12 YRS**	60	4.00	EA	
	LABEL PLAY SAFE 5–12 YRS						
23.0	A	101215	**MSDS SHEET T/U PAINT**	60	1.00	EA	
	MSDS SHEET T/U PAINT						
24.0	A	101219	**T/U PAINT 4.5oz CAN**	60	2.00	EA	
	T/U PAINT 4.5oz CAN						
25.0	A	101215	**MSDS SHEET T/U PAINT**	60	1.00	EA	
	MSDS SHEET T/U PAINT						
26.0	A	101219	**T/U PAINT 4.5oz CAN**	60	2.00	EA	
	T/U PAINT 4.5oz CAN						
27.0	A	101215	**MSDS SHEET T/U PAINT**	60	1.00	EA	
	MSDS SHEET T/U PAINT						
28.0	A	101219	**T/U PAINT 4.5oz CAN**	60	2.00	EA	
	T/U PAINT 4.5oz CAN						
29.0	A	111783	**INDEP PLAY COMPONENTS**	52	1.00	EA	
	INDEP PLAY COMPONENTS						

Continued on next page

landscape structures®

Invoice **INV-006429**

Line	P & M Code	Item #	Description		Product Line	Quantity	Unit of Measure
30.0	A	158997	**Pod Climber 10"**	52	2.00	EA	
	Description: DB, Play Components: 001 Blue, Primary Disc Color: 317 Limon						
31.0	A	120710	**Pod Climber 8"**	52	2.00	EA	
	Description: DB, Play Components: 001 Blue, Primary Disc Color: 317 Limon						
32.0	A	194704	**Boogie Board**	52	1.00	EA	
	Description: DB Only, Posts/Arches: 171 Graphite, Clamps/Ball Connectors: 317 Limon, Play Components: 001 Blue, Primary Permalene: 817 Recycled Limon/Black						

Please include invoice number INV-006429 and remit to:

Landscape Structures Inc.
SDS 12-0395 PO BOX 86
Minneapolis, MN 55486-0395

Your Account Representative is:
Stacey Schramel 1-888-208-9570

1.5% Finance Charge per Month Imposed
After 30 Days of Invoice Date

Esse Architects
632 Pershing Road | Raleigh NC 27608

Addendum No. 3

Lake Myra County Park Phase 1

Esse Architects Project #2212 | Owner ID #: RFB #26-077

Addendum No. 3

September 25, 2026

TO: ALL PRIME BIDDERS OF RECORD

This Addendum forms a part of the Contract Documents and modifies the original Project Manual and Construction Documents dated July 27, 2026. This Addendum form consists of two (2) pages and attachments as described in this form. All documents are distributed digitally.

DRAWINGS

1. Sheet MF-A201, MF-A203, and MF-A301 – Roof top solar panels at the Maintenance Facility will be angled as indicated in electrical specifications, not mounted flush. See electrical drawings and specifications. Sheets are not being reissued.

2. Sheet WS-A201, WS-A204, and WS-A301 – Roof top solar panels at the West Parcel Shelter will be angled as indicated in electrical specifications, not mounted flush. See electrical drawings and specifications. Sheets are not being reissued.

3. Sheet PC-A403 – INTERIOR ELEVATIONS – Where acoustical wall panels are indicated with AP-2 designation, these shall be corrected to AWP-2 to coordinate with the Finish Legend on Sheet PC-A131. Sheet will not be reissued.

4. Sheets PC-A421 – WALL SECTIONS and PC-A513 – TRANSITION DETAILS – The structure below the classroom entries at Doors 121, 121A, 122, and 122A has been revised. See revised sheets attached.

5. Sheet PC-A427 – WALL SECTIONS – The shaft wall detail around the beam has been revised. See revised sheet attached.

SPECIFICATIONS

Item No. Description

1. Section 09 8433 SOUND-ABSORBING WALL UNITS – Replace section in its entirety with the attached revised section.

CLARIFICATIONS

Item No. Description

6. Bidder Question: Architectural details call for 2x4 T&G roof decking however structural drawings call out 2x6. Which is correct?
   Response: All wood roof decking is 2x6.

7. Substitution Request: 10 2239 Folding Panel Partitions – Specifications call for an NRC rating of .95, for roll formed and welded panel construction, for all 16-ga. steel in panel construction, and for panels to have a perforated skin. Sound (both STC and NRC), rigidity, durability, and longevity are important on this project. Submitted Kwik-Wall substitution does not meet these specifications and therefore is not accepted for this project.

ATTACHMENTS

1. Revised Sheet PC-A421 – WALL SECTIONS (1 page)
2. Revised Sheet PC-A427 – WALL SECTIONS (1 page)
3. Revised Sheet PC-A513 – TRANSITION DETAILS (1 page)
4. Specification Section 09 8433 – SOUND-ABSORBING WALL UNITS (6 pages)

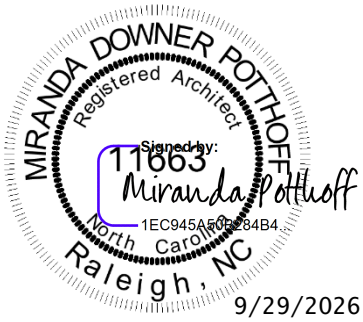

END OF ADDENDUM NO. 3.

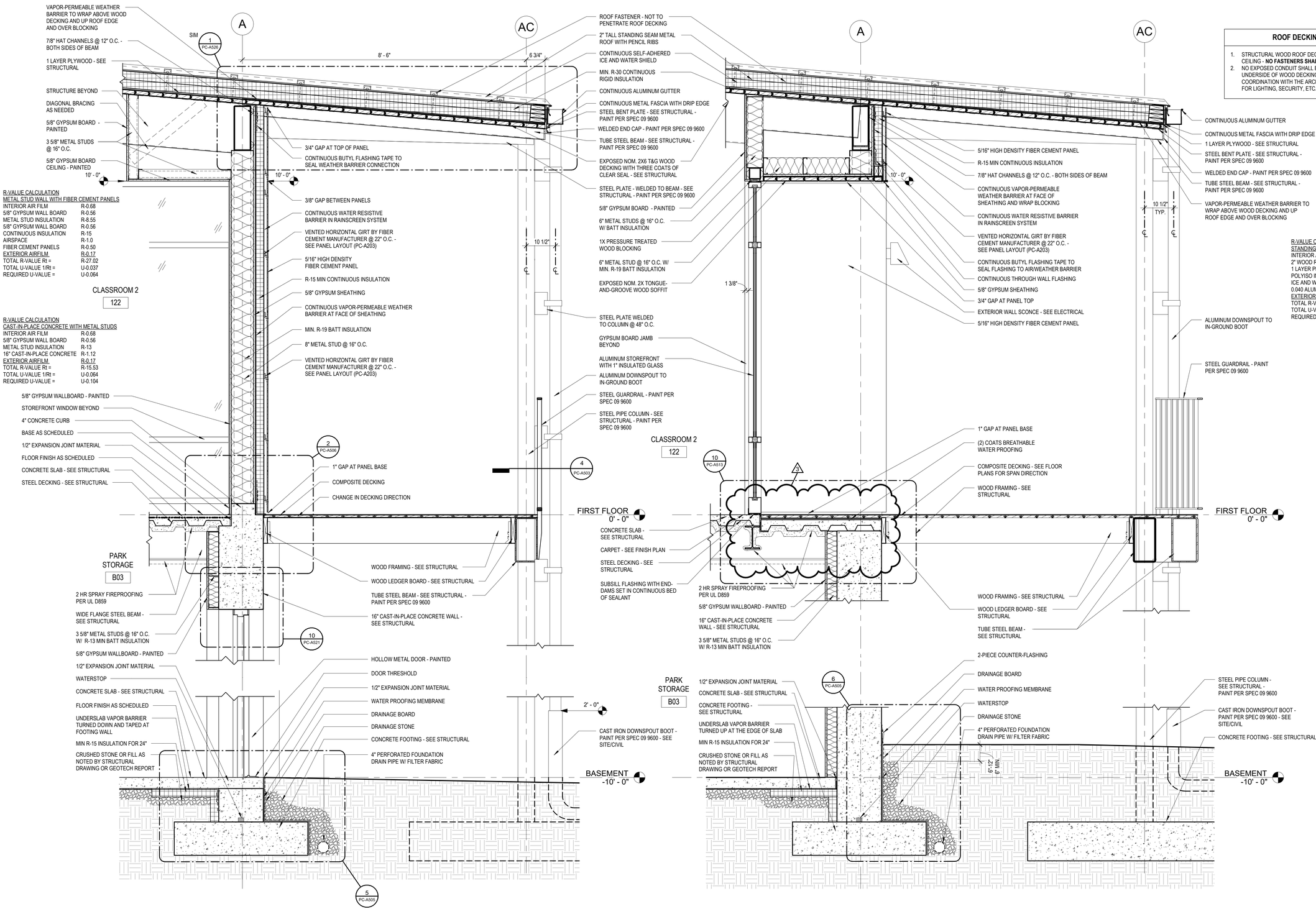

Susan Hatchell
Landscape Architecture, PLLC
711 W. North Street, Raleigh, NC 27603
p: 919-838-9600 f: 919-838-9700

Esse Architects
631 PERSHING ROAD | RALEIGH, NORTH CAROLINA 27608

WALL SECTIONS

LAKE MYRA COUNTY PARK
Wake County, NC

REVISIONS

3	ADDENDUM 3	2026.09.29

Esse Architects P.A. Registered Architectural Corporation 52498 North Carolina Raleigh, NC

MIRANDA DOWNER POTTHOFF Registered Architect 11863 North Carolina Raleigh, NC 9/29/2026

Date: 07/27/26

PC-A421

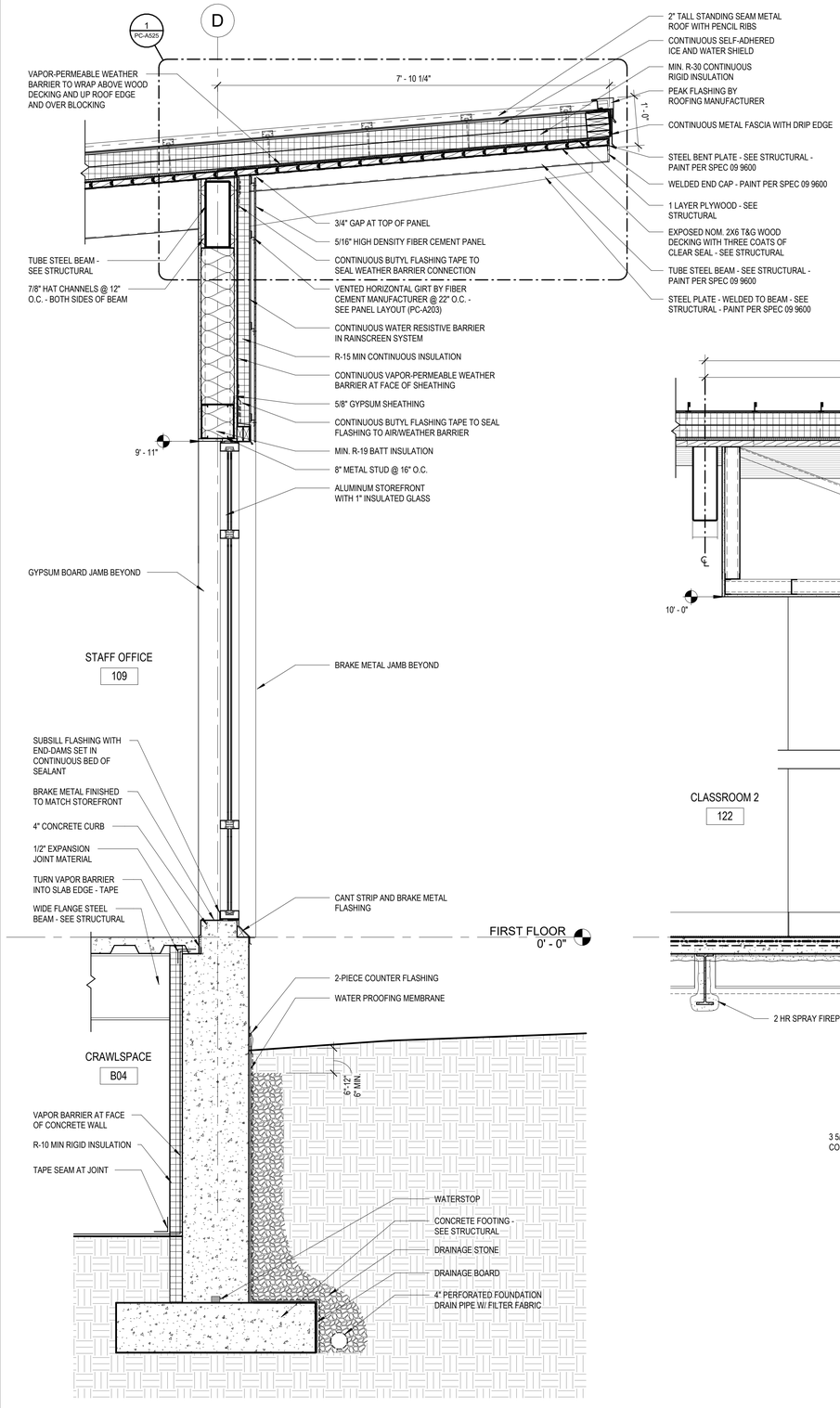

1 PC-A427 WALL SECTION @ STAFF WINDOW
3/4" = 1'-0"

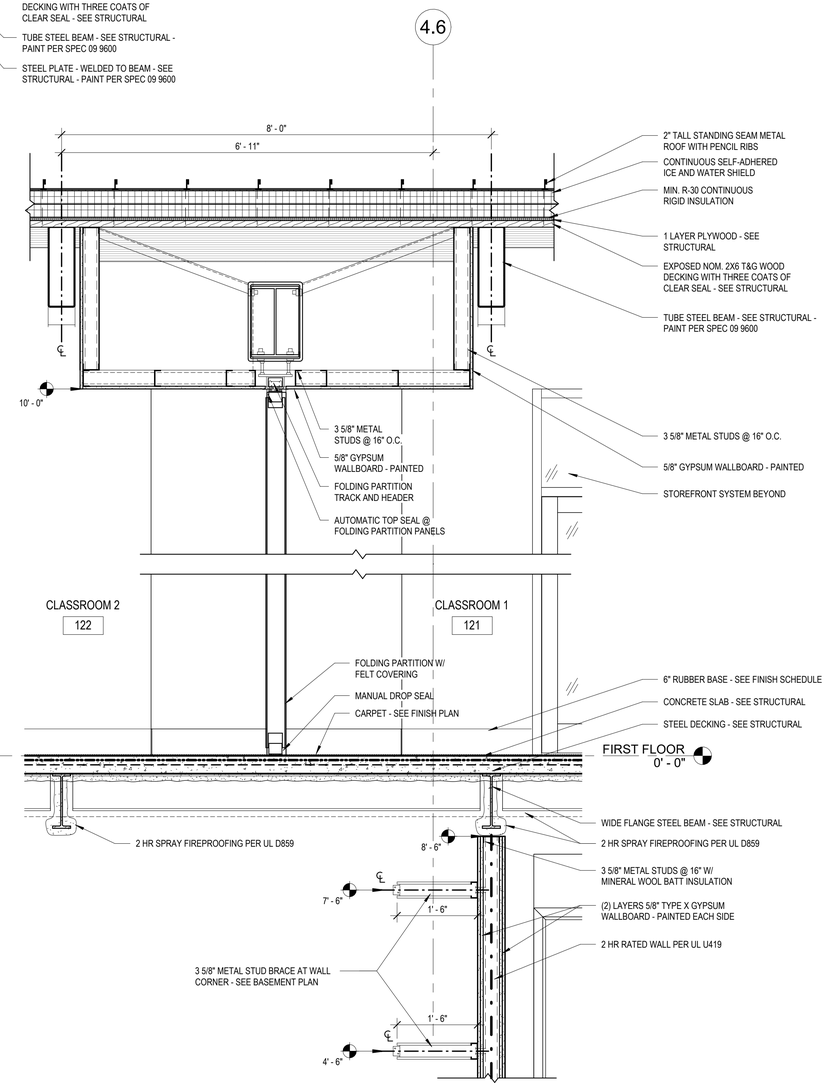

2 PC-A427 WALL SECTION @ FOLDING PARTITION
3/4" = 1'-0"

ROOF DECKING NOTES

1. STRUCTURAL WOOD ROOF DECK IS ALSO FINISHED CEILING - **NO FASTENERS SHALL PENETRATE DECKING**
2. NO EXPOSED CONDUIT SHALL BE RUN ACROSS UNDERSIDE OF WOOD DECKING WITHOUT REVIEW AND COORDINATION WITH THE ARCHITECT. COORDINATE FOR LIGHTING, SECURITY, ETC.

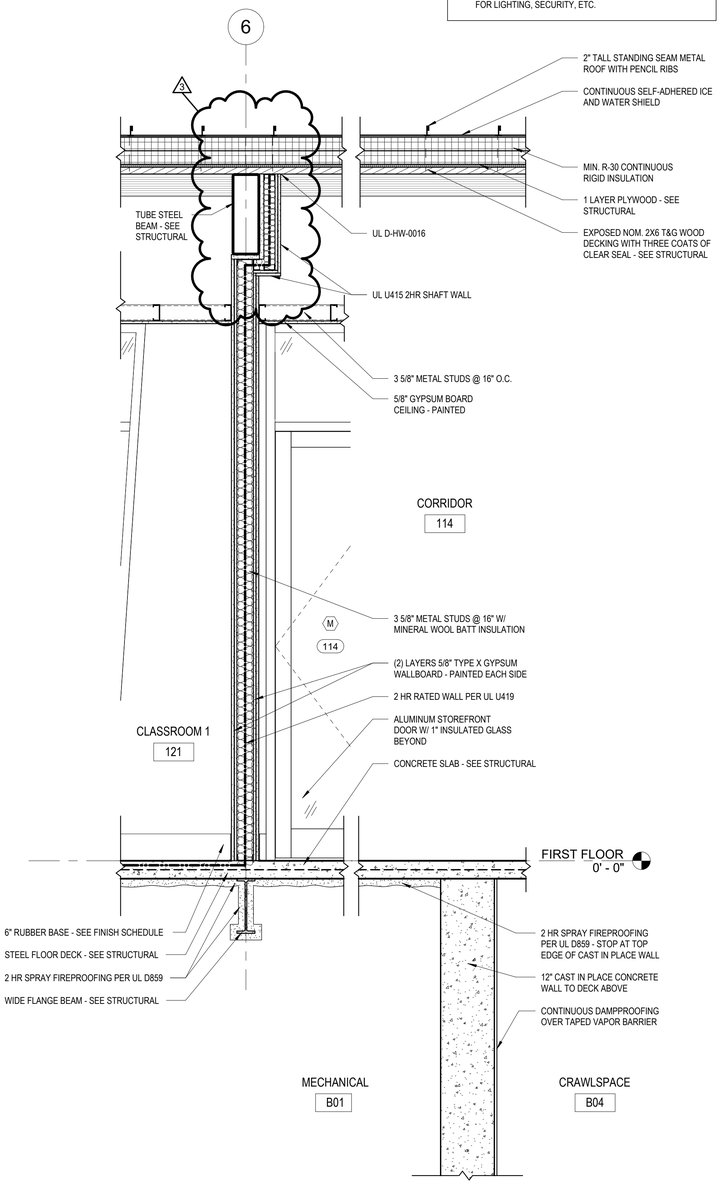

3 PC-A427 INT. WALL SECTION @ CLASSROOM / CORRIDOR
3/4" = 1'-0"

Susan Hatchell
Landscape Architecture, PLLC
711 W. North Street, Raleigh, NC 27603
p: 919-838-9600 f: 919-838-9700

Esse Architects
631 PERSHING ROAD | RALEIGH, NORTH CAROLINA 27608

WALL SECTIONS

LAKE MYRA COUNTY PARK
Wake County, NC

REVISIONS

3	ADDENDUM 3	2026.09.29

Esse Architects P.A. Registered Architectural Corporation 52498 North Carolina Raleigh, NC

MIRANDA DOWNER PORTHOUSE Registered Architect 17663 North Carolina Raleigh, NC
Signature: Miranda Porthouse
9/29/2026

Date: 07/27/26

PC-A427

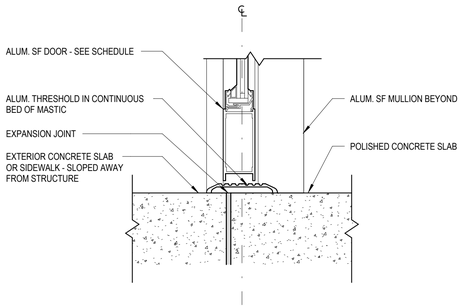

1 PC-A513 EXT. PAVING TO INT. CONCRETE @ STOREFRONT
3" = 1'-0"

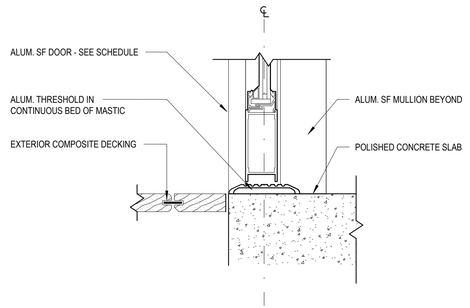

2 PC-A513 EXT. DECKING TO INT. CONCRETE @ STOREFRONT
3" = 1'-0"

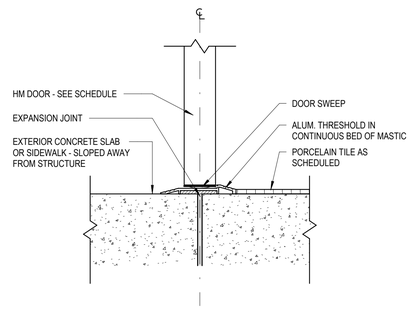

3 PC-A513 EXT. PAVING TO INT. TILE @ HM DOOR
3" = 1'-0"

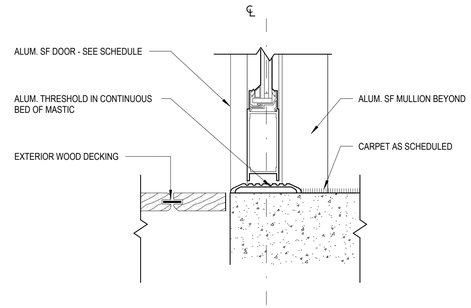

4 PC-A513 EXT. DECKING TO INT. CARPET @ STOREFRONT
3" = 1'-0"

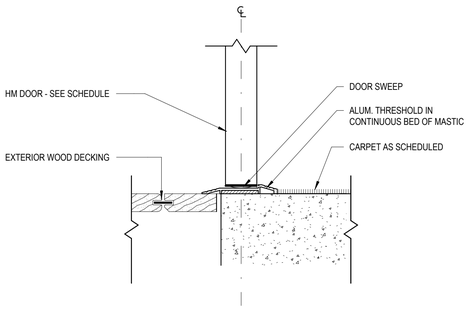

5 PC-A513 EXT. DECKING TO INT. CARPET @ HM DOOR
3" = 1'-0"

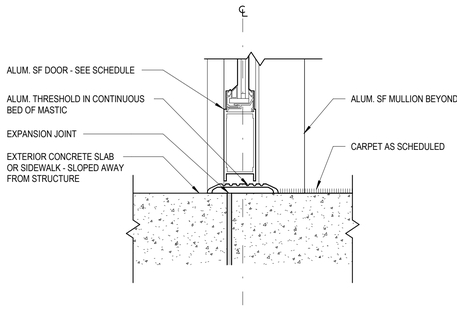

6 PC-A513 EXT. PAVING TO INT. CARPET @ STOREFRONT
3" = 1'-0"

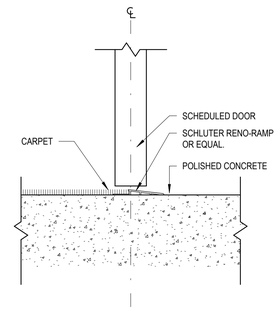

7 PC-A513 INT. TRANSITION - CARPET TO CONCRETE
3" = 1'-0"

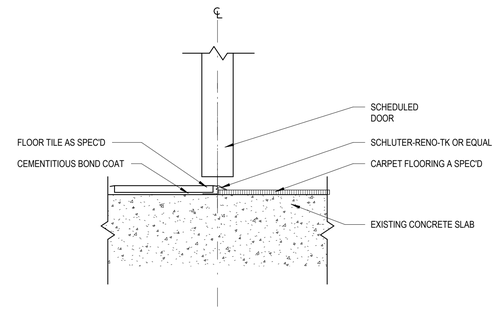

8 PC-A513 INT. TRANSITION - CARPET TO TILE
3" = 1'-0"

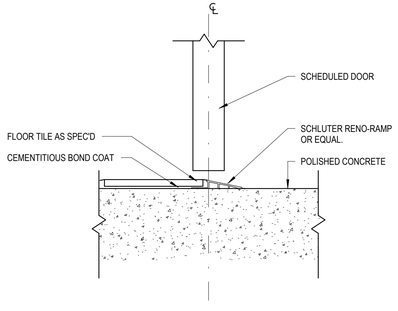

9 PC-A513 INT. TRANSITION - CONCRETE TO TILE
3" = 1'-0"

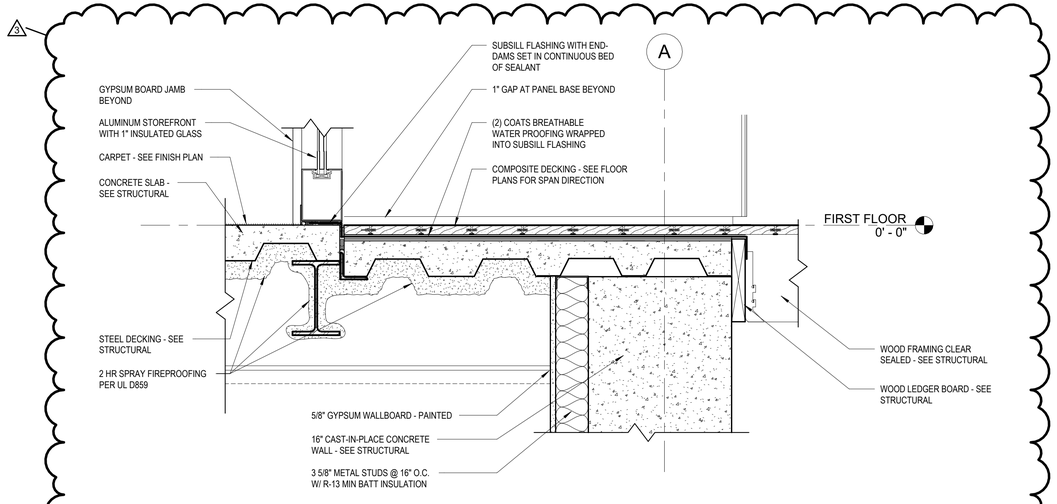

10 PC-A513 WATERPROOFING TRANSITION DETAIL @ CLASSROOMS
1 1/2" = 1'-0"

Susan Hatchell
Landscape Architecture, PLLC
711 W. North Street, Raleigh, NC 27603
p: 919-838-9600 f: 919-838-9700

Esse Architects
632 PERSHING ROAD | RALEIGH, NORTH CAROLINA 27608

TRANSITION DETAILS

LAKE MYRA COUNTY PARK
Wake County, NC

REVISIONS

3	ADDENDUM 3	2026.09.29

Esse Architects P.A. Registered Architectural Corporation North Carolina 52498 Raleigh, NC

MIRANDA DONNER POTTHOFF Registered Architect 11603 North Carolina Raleigh, NC 9/29/2026

Date: 07/27/26

PC-A513

SECTION 098433 - SOUND-ABSORBING WALL UNITS

PART 1 - GENERAL

1.1 RELATED DOCUMENTS

A. Drawings and general provisions of the Contract, including General and Supplementary Conditions and Division 01 Specification Sections, apply to this Section.

1.2 SUMMARY

A. Section includes shop-fabricated, acoustical panel units tested for acoustical performance, including the following:

1. Acoustical wall panels.

1.3 DEFINITIONS

A. NRC: Noise Reduction Coefficient.

B. SAA: Sound Absorption Average.

1.4 PREINSTALLATION MEETINGS

A. Preinstallation Conference: Conduct conference at Project site.

1.5 ACTION SUBMITTALS

A. Product Data: For each type of product.

B. Shop Drawings: For unit assembly and installation.

1. Include plans, elevations, sections and mounting devices and details.
2. Include details at panel head, base, joints and corners and details at ceiling, floor base, and wall intersections. Indicate panel edge profile and core materials.
3. Include details at cutouts and penetrations for other work.

C. Samples for Verification: For the following products:

1. Panel Edge: 12-inch- (300-mm-) long Sample(s) showing each edge profile, corner, and finish.
2. Core Material: 12-inch- (300-mm-) square Sample at corner.
3. Mounting Devices: Full-size Samples.

1.6 CLOSEOUT SUBMITTALS

A. Maintenance Data: For each type of unit to include in maintenance manuals. Include fabric manufacturers' written cleaning and stain-removal instructions.

1.7 QUALITY ASSURANCE

A. Mockups: Build mockups to verify selections made under Sample submittals, to demonstrate aesthetic effects, and to set quality standards for materials, fabrication, and installation.

1. Build mockup of typical wall area 48 inches (1200 mm) wide by full height.
2. Approval of mockups does not constitute approval of deviations from the Contract Documents contained in mockups unless Architect specifically approves such deviations in writing.
3. Subject to compliance with requirements, approved mockups may become part of the completed Work if undisturbed at time of Substantial Completion.

1.8 DELIVERY, STORAGE, AND HANDLING

A. Comply with unit manufacturers' written instructions for minimum and maximum temperature and humidity requirements for shipment, storage, and handling.

B. Deliver materials and units in unopened bundles and store in a temperature-controlled dry place with adequate air circulation.

1.9 FIELD CONDITIONS

A. Environmental Limitations: Do not install units until spaces are enclosed and weathertight, wet-work in spaces is complete and dry, work at and above ceilings is complete, and ambient temperature and humidity conditions are maintained at the levels indicated for Project when occupied for its intended use.

B. Lighting: Do not install units until a permanent level of lighting is provided on surfaces to receive the units.

C. Field Measurements: Verify unit locations and actual dimensions of openings and penetrations by field measurements before fabrication, and indicate them on Shop Drawings.

1.10 WARRANTY

A. Special Warranty: Manufacturer agrees to repair or replace units and components that fail in materials or workmanship within specified warranty period.

1. Failures include, but are not limited to the following:

a. Acoustical performance.

b. Warping of core.

2. Warranty Period: Two years from date of Substantial Completion.

PART 2 - PRODUCTS

2.1 MANUFACTURERS

A. Source Limitations: Obtain wall units specified in this Section from single source from single manufacturer.

B. Basis of Design: Sound absorbing wall units AWP-1 is based on Wallscape as manufactured by Turf and AWP-2 is based on Feltworks as manufactured by Armstrong World Industries. Subject to compliance with requirements, provide the named products or equal as noted in the Architectural Finish Legend.

2.2 PERFORMANCE REQUIREMENTS

A. Fire-Test-Response Characteristics: Units shall comply with "Surface-Burning Characteristics" or "Fire Growth Contribution" Subparagraph below, or both, as determined by testing identical products by UL or another testing and inspecting agency acceptable to authorities having jurisdiction:

1. Fire Rating: Class A.

2.3 SOUND-ABSORBING WALL UNITS (AWP-1)

A. Sound-Absorbing Wall Panel: Manufacturer's standard panel construction consisting of facing material laminated to front face, edges and back edge border of core.

1. Panel Shape: As indicated on Drawings.
2. Panel Size: 12 by 12 inches (305 by 305 mm).
3. Mounting: Liquid nails LN-903.
4. Edge Construction: Manufacturer's standard.
5. Edge Profile: Square.
6. Corner Detail in Elevation: Square with continuous edge profile indicated.
7. Reveals between Panels: As indicated on Drawings.
8. Facing Material: As selected by the Architect from manufacturer’s full range.
9. Acoustical Performance: Sound absorption NRC of 0.40.
10. Nominal Thickness: Manufacturer’s standard.

2.4 SOUND-ABSORBING WALL UNITS (AWP-2)

A. Sound-Absorbing Wall Panel: Manufacturer's standard panel construction consisting of facing material laminated to front face, edges and back edge border of core.

1. Panel Shape: As indicated on Drawings.

2. Panel Size: 24 by 48 inches.
3. Mounting: Z-clip & Z-bar.
4. Edge Construction: Manufacturer's standard.
5. Edge Profile: Beveled.
6. Corner Detail in Elevation: Beveled.
7. Reveals between Panels: As indicated on Drawings.
8. Facing Material: As selected by the Architect from manufacturer’s full range.
9. Acoustical Performance: Sound absorption NRC of 0.80.
10. Nominal Thickness: Manufacturer’s standard.

2.5 FABRICATION

A. Standard Construction: Use manufacturer's standard construction unless otherwise indicated; with facing material applied to face, edges, and back border of dimensionally stable core; and with rigid edges to reinforce panel perimeter against warpage and damage.

B. Facing Material: Apply fabric facing fully covering visible surfaces of unit; with material stretched straight, on the grain, tight, square, and free from puckers, ripples, wrinkles, sags, blisters, seams, adhesive, or other visible distortions or foreign matter.

C. Dimensional Tolerances of Finished Units: Plus or minus 1/16 inch (1.6 mm) for the following:

1. Thickness.
2. Edge straightness.
3. Overall length and width.
4. Squareness from corner to corner.
5. Chords, radius, and diameters.

PART 3 - EXECUTION

3.1 EXAMINATION

A. Examine fabric, fabricated units, substrates, areas, and conditions for compliance with requirements, installation tolerances, and other conditions affecting unit performance.

B. Proceed with installation only after unsatisfactory conditions have been corrected.

3.2 INSTALLATION

A. Install units in locations indicated. Unless otherwise indicated, install units with vertical surfaces and edges plumb, top edges level and in alignment with other units, faces flush, and scribed to fit adjoining work accurately at borders and at penetrations.

B. Comply with manufacturer's written instructions for installation of units using type of mounting devices indicated. Mount units securely to supporting substrate.

C. Align fabric pattern and grain as indicated on Drawings.

3.3 INSTALLATION TOLERANCES

A. Variation from Plumb and Level: Plus or minus 1/16 inch (1.6 mm) in 48 inches (1200 mm), noncumulative.

B. Variation of Joint Width: Not more than 1/16-inch (1.6-mm).

3.4 CLEANING

A. Clip loose threads; remove pills and extraneous materials.

B. Clean panels on completion of installation to remove dust and other foreign materials according to manufacturer's written instructions.

END OF SECTION 098433

September 29, 2026

Addendum 03 for Bid Documents:

SPECIFICATIONS:

- N/A

PARK CENTER DRAWINGS:

PC-S003 – GENERAL NOTES

- Removed duplicated schedules

PC-S005 – SPECIAL INSPECTIONS NC1

- Added special inspections schedules

PC-S006 – SPECIAL INSPECTIONS NC2

- Added special inspections schedules

PC-S007 – SPECIAL INSPECTIONS NC2

- Added special inspections schedules

PC-S101 – PARK CENTER BASEMENT FOUNDATION AND SLAB PLAN

- Clarified slab-on-grade construction in basement

PC-S102 – PARK CENTER FIRST FLOOR SLAB PLAN

- Clarified concrete on composite metal deck construction
- Added framing to exterior deck

PC-S103 – PARK CENTER FIRST FLOOR FRAMING PLAN

- Added tags to canopy columns
- Clarified moment reactions

PC-S104 – PARK CENTER ROOF FRAMING PLAN

- Adjusted moment reaction formatting
- Added clarity to roof deck construction

PC-S301 – SECTIONS

- Broke some views into multiple sections for clarity

PC-S302 – SECTIONS

- Added additional callouts to section A3 and B3

PC-S303 – SECTIONS

- Added additional dimensioning information to section C1

PC-S400 – BRACED FRAME ELEVATIONS

- Added sheet to provide more information for braced frame elevations

MAINTENANCE FACILITY DRAWINGS:

MF-S004 -GENERAL NOTES

- Sheet removed

MF-S102 – MAINTENANCE FACILITY ROOF FRAMING PLAN

- Adjusted moment reaction formatting

MF-S301 – SECTIONS

- Added additional reinforcement information to sections A1 and A2
- Adjusted alignment of interior and exterior concrete slabs on section B2

MF-S302 – SECTIONS

- Added information to steel fit plates on section A3

SHELTERS DRAWINGS:

ES-S102 - SHELTER A AND B FRAMING PLAN

- Added additional callouts to section A2
- Adjusted moment reaction formatting

ES-S302 – SECTIONS

- Added additional dimensioning and weld information to sections B1, B2, and A2.

WESTERN STRUCTURES DRAWINGS:

WS-S102 – WESTERN SHELTER ROOF FRAMING PLAN

- Added additional dimensioning to fin plate on section B1

WS-S103 – WELL HOUSE PLANS

- Added beam tags to steel overhangs

WS-S301 – WELL HOUSE SECTIONS

- Sheet removed

WS-S302 – SECTIONS

- Additional dimensioning information added to steel fin plate on section C3
- Additional callouts added for connection between roof decking and roof structure

If you have any questions or comments, please contact Bryce Lumpkin (bryce.m.lumpkin@imegcorp.com).

POST-INSTALLED ANCHOR NOTES:

1. ANCHORS TO BE POST-INSTALLED ONLY WHERE INDICATED ON CONSTRUCTION DOCUMENTS. ANY SUBSTITUTE OF CAST-IN ANCHOR TO POST-INSTALLED ANCHORS MUST BE SUBMITTED AS A REQUEST FOR DEVIATION TO THE ENGINEER OF RECORD PRIOR TO CONSTRUCTION.

2. ALL POST INSTALLED ANCHORS INDICATED ON THE DRAWINGS ARE BY HILTI, INC, AND MUST BE CONSIDERED THE BASIS OF DESIGN PRODUCT. WHERE NOT EXPLICITLY INDICATED IN THE DRAWINGS, THE FOLLOWING ANCHORS/ADHESIVES MUST BE USED:
   A. ANCHORAGE TO CONCRETE
      1. ADHESIVE ANCHORS FOR CRACKED AND UNCRACKED CONCRETE USE:
         a. HILTI HIT-HY 200 SAFE SET SYSTEM WITH HILTI HOLLOW DRILL BIT (TE-CD OR TE-YD) AND VC 20/40 VACUUM SYSTEM (VC 20-U OR VC40U) WITH STEEL THREADED ROD PER ICC ESR-3187.
      2. SCREW ANCHORS FOR CRACKED AND UNCRACKED CONCRETE USE:
         a. HILTI KWIK HUS EZ SCREW ANCHORS PER ICC ESR-3027.
   B. REBAR DOWELING INTO CONCRETE
      1. ADHESIVE ANCHORS FOR CRACKED AND UNCRACKED CONCRETE USE:
         a. HILTI HIT-HY 200 SAFE SET SYSTEM WITH HILTI HOLLOW DRILL BIT (TE-CD OR TE-YD) AND VC 20/40 VACUUM SYSTEM (VC 20-U OR VC 40-U) WITH CONTINUOUSLY DEFORMED REBAR PER ICC ESR-3187.
   C. ANCHORAGE TO SOLID GROUTED MASONRY
      1. ADHESIVE ANCHORS USE:
         a. HILTI HIT-HY 270 MASONRY ADHESIVE ANCHORING SYSTEM (ICC PENDING).
         b. STEEL ANCHOR ELEMENT MUST BE HILTI HAS-E CONTINUOUSLY THREADED ROD.
      2. MECHANICAL ANCHORS USE:
         a. HILTI KWIK HUS EZ SCREW ANCHORS PER ICC ESR 3056.
   D. ANCHORAGE TO HOLLOW / MULTI-WYTHE MASONRY
      1. ADHESIVE ANCHORS USE:
         a. HILTI HIT-HY 270 MASONRY ADHESIVE ANCHORING SYSTEM PERICCESR-3342.
         b. STEEL ANCHOR ELEMENT MUST BE HILTI HAS-E CONTINUOUSLY THREADED ROD OR CONTINUOUSLY DEFORMED STEEL REBAR.
         c. THE APPROPRIATE SIZE SCREEN TUBE MUST BE USED PER ADHESIVE MANUFACTURER'S RECOMMENDATION.

3. ALTERNATE POST INSTALLED ANCHOR PRODUCTS MAY BE SUBMITTED TO THE ENGINEER FOR REVIEW AND POSSIBLE APPROVAL. ALL SUBSTITUTION REQUESTS MUST BE ACCOMPANIED BY AN ICC ESR SHOWING COMPLIANCE WITH THE RELEVANT BUILDING CODE FOR SEISMIC USES, LOAD RESISTANCE, INSTALLATION CATEGORY, AND COMPREHENSIVE INSTALLATION INSTRUCTIONS. ADHESIVE ANCHOR EVALUATION WILL ALSO CONSIDER CREEP, IN-SERVICE TEMPERATURE AND INSTALLATION TEMPERATURE. ALTERNATE PRODUCTS MAY REQUIRE MODIFICATIONS TO ANCHOR DIAMETER, SPACING, AND EMBEDMENT.

4. INSTALL ANCHORS PER THE MANUFACTURER INSTRUCTIONS, AS INCLUDED IN THE ANCHOR PACKAGING.

5. THE CONTRACTOR MUST ARRANGE FOR AN ANCHOR MANUFACTURER'S REPRESENTATIVE TO PROVIDE ONSITE INSTALLATION TRAINING FOR ALL OF THEIR ANCHORING PRODUCTS SPECIFIED. THE STRUCTURAL ENGINEER OF RECORD MUST RECEIVE DOCUMENTED CONFIRMATION THAT ALL OF THE CONTRACTOR'S PERSONNEL WHO INSTALL ANCHORS ARE TRAINED PRIOR TO THE COMMENCEMENT OF ANCHOR INSTALLATION.

6. ANCHOR CAPACITY IS DEPENDANT UPON SPACING BETWEEN ADJACENT ANCHORS AND PROXIMITY OF ANCHORS TO EDGE OF CONCRETE. INSTALL ANCHORS IN ACCORDANCE WITH SPACING AND EDGE CLEARANCES INDICATED ON THE DRAWINGS.

7. EXISTING REINFORCING BARS IN THE CONCRETE STRUCTURE MAY CONFLICT WITH SPECIFIC ANCHOR LOCATIONS. UNLESS NOTED ON THE DRAWINGS THAT THE BARS CAN BE CUT, THE CONTRACTOR MUST LOCATE THE POSITION OF THE REINFORCING BARS AT THE LOCATIONS OF THE CONCRETE ANCHORS, BY FERROSCAN OR GPR.

8. ALL POST INSTALLED ANCHORS REQUIRE CONTINUOUS INSPECTIONS BY THE OWNER'S MATERIALS TESTING AGENCY TO VERIFY INSTALLATION HAS BEEN PERFORMED IN ACCORDANCE WITH THE MANUFACTURER'S WRITTEN INSTRUCTIONS.

CONCRETE MASONRY NOTES:

1. CONCRETE MASONRY MATERIALS AND CONSTRUCTION MUST CONFORM TO THE AMERICAN CONCRETE INSTITUTE (ACI) "BUILDING CODE REQUIREMENTS FOR MASONRY STRUCTURES" (TMS 402 / ACI 530 / ASCE 5) AND "SPECIFICATIONS FOR MASONRY STRUCTURES" (TMS 602 / ACI 530.1 / ASCE 6).

2. CONCRETE MASONRY UNITS MUST CONFORM TO ASTM C90 AND MUST BE MADE WITH LIGHTWEIGHT AGGREGATE.

3. COMPRESSIVE STRENGTH OF MASONRY MUST BE DETERMINED BY THE UNIT STRENGTH METHOD AS SET FORTH IN ACI 530.1. THE NET AREA COMPRESSIVE STRENGTH OF MASONRY, f'm, MUST BE 2,000 PSI AT 28 DAYS.

4. MORTAR MUST BE TYPE 'M' OR 'S' AND MUST COMPLY WITH ASTM C270, PROPORTIONS OR PROPERTIES SPECIFICATION.

5. GROUT MUST COMPLY WITH EITHER THE PROPORTIONS OR PROPERTIES SPECIFICATION OF ASTM C476 AND AS FOLLOWS:
   A. PROPORTIONS SPECIFICATION: THIS MIX CANNOT CONTAIN ADMIXTURES. WATER MUST BE ADDED IN THE FIELD IN ORDER TO ACHIEVE A SLUMP OF 8-11 INCHES WHEN PLACED IN THE CONCRETE MASONRY UNITS. MORTAR, PEA-GRAVEL CONCRETE, OR "CHAT" MIXES ARE NOT ACCEPTABLE SUBSTITUTES FOR THE SPECIFIED GROUT.
   B. PROPERTIES SPECIFICATION: THIS MIX MUST BE PROPORTIONED TO OBTAIN A DOCUMENTED 28 DAY COMPRESSIVE STRENGTH OF 2,500 PSI, WITH 3/8" MAX AGGREGATE AND AN 8-11 INCH SLUMP WHEN PLACED IN THE CONCRETE MASONRY UNITS.

6. GROUT MUST COMPLY WITH EITHER THE PROPORTIONS OR PROPERTIES SPECIFICATION OF ASTM C476 AND THIS MIX MUST BE PROPORTIONED TO OBTAIN A DOCUMENTED 28 DAY COMPRESSIVE STRENGTH OF 8,000 PSI, WITH AN 8-11 INCH SLUMP WHEN PLACED IN THE CONCRETE MASONRY UNITS.

7. REINFORCING STEEL MUST COMPLY WITH ASTM A615, GRADE 60. SHOP FABRICATE REINFORCING BARS WHICH ARE SHOWN TO BE BENT OR HOOKED.

8. ALL BOND BEAMS, REINFORCED CELLS AND CELLS WITH EXPANSION BOLTS, EMBED PLATES OR OTHER ANCHORS AND ALL CELLS BELOW GRADE MUST BE GROUTED SOLID. GROUT PROCEDURE MUST COMPLY WITH ACI 530.1.

9. ALL CMU WALLS MUST BE REINFORCED CONTINUOUSLY FROM FOUNDATION TO TOP OF WALL. WHERE REINFORCING IS INTERRUPTED, OFFSET AND LAP ADDITIONAL BARS PER THE "TYPICAL OFFSET SPLICE AT MASONRY WALL DETAILS."

10. LAP ALL REINFORCING PER SCHEDULE BELOW, TYPICAL UNLESS OTHERWISE NOTED:

MASONRY LAP SCHEDULE

REINF SIZE	52 x BAR DIAMETER	72 x BAR DIAMETER
#4	26"	36"
#5	33"	45"
#6	39"	54"
#7	46"	63"
#8	52"	72"

11. PROVIDE MECHANICAL SPLICES FOR ALL #9 BARS AND LARGER AND FOR ALL BARS AT CONTRACTOR'S OPTION.

12. ALL NON-BEARING MASONRY WALLS MUST BE REINFORCED WITH #4 VERTICAL BARS AT 40 INCHES ON CENTER, TYPICAL UNLESS OTHERWISE NOTED.

13. PROVIDE REINFORCING STEEL DOWELS OF THE SAME SIZE AND SPACING AS VERTICAL REINFORCING FROM THE SUPPORTING STRUCTURE. [DOWELS MUST HAVE STANDARD ACI HOOKS.

14. PROVIDE STANDARD 9 GAGE TRUSS TYPE HORIZONTAL JOINT REINFORCING IN CMU WALLS AT 16 INCHES ON-CENTER VERTICALLY AND AT 8 INCHES ON-CENTER VERTICALLY AT PARAPETS. ADDITIONALLY PROVIDE IN THE TWO JOINTS IMMEDIATELY ABOVE AND BELOW ALL OPENINGS, EXTENDING A MINIMUM OF 2 FEET BEYOND THE JAMB ON EACH SIDE OF THE OPENING, EXCEPT AT CONTROL JOINTS.

15. PROVIDE VERTICAL CONTROL JOINTS AT 25 FEET ON-CENTER MAXIMUM, OR NOT MORE THAN 1.5 TIMES THE HEIGHT OF THE WALL AT CONTROL JOINTS. PROVIDE CONTINUOUS HORIZONTAL BOND BEAM REINFORCEMENT AS SHOWN IN THE SECTIONS AND DETAILS CONTINUOUS THROUGH CONTROL JOINTS. DO NOT PLACE PLACE GROUT CONTINUOUSLY AT CONTROL JOINTS.

16. DO NOT LOCATE CONTROL JOINTS WITHIN TWO FEET OF STEEL BEAM BEARING LOCATIONS.

17. PLACE GROUT WITH POUR HEIGHT NOT EXCEEDING 5 FEET. CONSOLIDATE EACH POUR BY MECHANICAL VIBRATION. RECONSOLIDATE AFTER INITIAL WATER LOSS AND SETTLEMENT OCCUR.

19. GROUT POUR HEIGHT MAY BE INCREASED WHERE THE FOLLOWING CONDITIONS ARE MET:
   A. LIMIT POUR HEIGHT BASED ON A MINIMUM WIDTH OF GROUT SPACE IN ACCORDANCE WITH TABLE 7 OF ACI 530.1 / ASCE 6 / TMS 602.
   B. PLACE GROUT IN LIFTS NOT EXCEEDING THE LIMITATIONS SPECIFIED IN ACE 530.1/ASCE 6/TMS 602.
   C. CONSOLIDATE EACH POUR BY MECHANICAL VIBRATION. RECONSOLIDATE AFTER INITIAL WATER LOSS AND SETTLEMENT HAS OCCURED.
   D. FORM A GROUT KEY BETWEEN POURS ACCORDING TO ACI 530.1 / ASCE 6 / TMS 602.
   E. PROVIDE AN INSPECTION PORT (CLEANOUT) AT EACH CELL TO BE GROUTED AT THE BASE OF EACH POUR.
   F. SUBMIT SHOP DRAWINGS DETAILING THE PROPOSED GROUTING PROCEDURE ALONG WITH (3) REFERENCES OF PREVIOUS SUCCESSFUL PROJECTS.

20. MASONRY SHALL BE CONSTRUCTED IN RUNNING BOND PATTERN AND ALL CORNERS TO BE TIED BY MASONRY BOND.

21. SUBMITTALS FOR CONCRETE MASONRY MUST INCLUDE THE FOLLOWING:
   A. PRODUCT DATA/MATERIAL CERTIFICATES: SUBMIT DATA AND CERTIFICATES FOR MASONRY UNITS, CEMENTITOUS MATERIALS, MORTAR ADMIXTURES, PRE-BLENDED DRY MORTAR MIXES, REINFORCING BARS, JOINT REINFORCEMENT, ANCHORS, TIES, AND METAL ACCESSORIES.
   B. REINFORCEMENT SHOP DRAWINGS: SHOW ELEVATIONS OF REINFORCED WALLS. MUST COMPLY WITH ACI DETAILING MANUAL: DETAIL BENDING, LAP LENGTHS, AND PLACEMENT OF UNIT MASONRY REINFORCING BARS.
   C. MIX DESIGNS: SUBMIT MIX DESIGNS FOR EACH TYPE OF MORTAR AND GROUT AND INCLUDE DESCRIPTION OF TYPE AND PROPORTIONS OF INGREDIENTS. INCLUDE TEST REPORTS FOR GROUT MIXES ACCORDING TO ASTM C1019
   D. SHOP DRAWINGS MUST INDICATE THE DATE OF THE STRUCTURAL DRAWINGS THAT WERE USED IN PREPARATION.

STATEMENT OF SPECIAL INSPECTION SERVICES

PROJECT:
LOCATION:
OWNER'S REPRESENTATIVE:
OWNER'S ADDRESS:

THIS STATEMENT OF SPECIAL INSPECTIONS IS SUBMITTED AS A CONDITION FOR PERMIT ISSUANCE IN ACCORDANCE WITH THE SPECIAL INSPECTION REQUIREMENTS OF THE 2018 NORTH CAROLINA STATE BUILDING CODE. IT INCLUDES A SCHEDULE OF SPECIAL INSPECTION SERVICES APPLICABLE TO THIS PROJECT, THE NAME OF THE SPECIAL INSPECTOR, THE IDENTITY OF OTHER APPROVED AGENCIES RETAINED FOR CONDUCTING SPECIAL INSPECTIONS, AND THE REQUIRED INSPECTOR QUALIFICATIONS. THIS STATEMENT OF SPECIAL INSPECTIONS WAS PREPARED BY THE FOLLOWING DESIGNERS OF RECORD:

STRUCTURAL	SCOTT FRANCIS		07/27/2026
	(Type or print name)	(Signature)	(Date)
ARCHITECTURAL			
	(Type or print name)	(Signature)	(Date)
MECHANICAL			
	(Type or print name)	(Signature)	(Date)
OTHER			
	(Type or print name)	(Signature)	(Date)

THE SPECIAL INSPECTOR MUST KEEP RECORDS OF ALL SPECIAL INSPECTIONS AND TESTS AND MUST FURNISH REPORTS TO THE STATE CONSTRUCTION OFFICE AND THE DESIGNERS OF RECORD. REPORTS MUST INDICATE IF THE WORK INSPECTED OR TESTED WAS OR WAS NOT COMPLETED IN CONFORMANCE WITH THE APPROVED CONSTRUCTION DOCUMENTS. DISCOVERED DISCREPANCIES MUST BE BROUGHT TO THE IMMEDIATE ATTENTION OF THE CONTRACTOR FOR CORRECTION. IF SUCH DISCREPANCIES ARE NOT CORRECTED, THE DISCREPANCIES MUST BE BROUGHT TO THE ATTENTION OF THE STATE CONSTRUCTION OFFICE AND THE DESIGNERS OF RECORD. THE SPECIAL INSPECTIONS PROGRAM DOES NOT RELIEVE THE CONTRACTOR OF HIS OR HER RESPONSIBILITIES.

INTERIM REPORTS MUST BE SUBMITTED TO THE STATE CONSTRUCTION OFFICE, OWNER, AND THE DESIGNERS OF RECORD.

INTERIM REPORT FREQUENCY: MONTHLY

A FINAL REPORT OF SPECIAL INSPECTIONS DOCUMENTING COMPLETION OF ALL REQUIRED SPECIAL INSPECTIONS, TESTING, AND CORRECTION OF ANY DISCREPANCIES SHOULD BE SUBMITTED PRIOR TO ISSUANCE OF A CERTIFICATE OF USE AND OCCUPANCY.

JOB SITE SAFETY AND MEANS AND METHODS OF CONSTRUCTION ARE SOLELY THE RESPONSIBILITY OF THE CONTRACTOR.

OWNER'S AUTHORIZATION

(Signature) (Date)

ACCEPTED FOR THE SCO BY:

(Signature) (Date)

Susan Hatchell
Landscape Architecture, PLLC
711 W. North Street, Raleigh, NC 27603
p: 919-838-9600 f: 919-838-9700

lynchmykins now IMEG
301 N WEST STREET, SUITE 105
RALEIGH, NC 27603
919.782.1833 www.imegcorp.com

GENERAL NOTES

LAKE MYRA COUNTY PARK
Wake County, NC

REVISIONS

9/29/2026	ADDENDUM #3

lynchmykins now IMEG
301 N WEST STREET, SUITE 105
RALEIGH, NC 27603
919.782.1833 www.imegcorp.com

IMEG RESERVES PROPRIETARY RIGHTS, INCLUDING COPYRIGHTS, TO THIS DRAWING AND THE DATA SHOWN THEREON. SAID DRAWING AND/OR DATA ARE THE EXCLUSIVE PROPERTY OF IMEG AND SHALL NOT BE USED OR REPRODUCED FOR ANY OTHER PROJECT WITHOUT THE EXPRESS WRITTEN APPROVAL AND PARTICIPATION OF IMEG.
©2025 IMEG CONSULTANTS CORP.
North Carolina Design Registration #F-1507

Date: 7/27/26

PC-S003

SCHEDULE OF SPECIAL INSPECTION SERVICES [A]

THE FOLLOWING COMPRISES THE REQUIRED SCHEDULE OF SPECIAL INSPECTIONS FOR THIS PROJECT. THE CONSTRUCTION DIVISIONS WHICH REQUIRE SPECIAL INSPECTIONS FOR THIS PROJECT ARE AS FOLLOWS.

- [X] STRUCTURAL STEEL & HIGH STRENGTH BOLTING
- [X] WELDING OF STRUCTURAL STEEL
- [X] COLD-FORMED STEEL DECK
- [ ] OPEN-WEB STEEL JOISTS & JOIST GIRDERS
- [ ] COLD-FORMED STEEL FRAMING
- [X] CONCRETE CONSTRUCTION
- [X] MASONRY CONSTRUCTION [B]
- [X] WOOD CONSTRUCTION
- [X] SOILS
- [ ] DRIVEN DEEP FOUNDATIONS
- [ ] CAST-IN-PLACE DEEP FOUNDATIONS
- [ ] HELICAL PILE FOUNDATIONS
- [ ] RAMMED AGGREGATE PIERS & STONE COLUMNS
- [X] SPRAYED FIRE-RESISTANT MATERIAL
- [X] MASTIC & INTUMESCENT FIRE-RESISTANT COATINGS
- [X] EXTERIOR INSULATION & FINISH SYSTEM
- [X] FIRE-RESISTANT PENETRATIONS & JOINTS
- [X] SMOKE CONTROL
- [X] RETAINING WALL & SYSTEMS > 5 FEET
- [X] SPECIAL INSPECTIONS FOR WIND RESISTANCE
- [ ] SPECIAL INSPECTIONS FOR SEISMIC RESISTANCE

A. THE INSPECTION FREQUENCY INDICATED ON THE FOLLOWING INSPECTION TABLES ARE "C" CONTINUOUS, "P" PERIODIC, & "O" RANDOM ON A DAILY BASIS.
B. LEVEL A IS THE MINIMUM INSPECTION PROGRAM FOR EMPIRICALLY / PRESCRIPTIVELY DESIGNED MASONRY IN RISK CATEGORY I, II OR III STRUCTURES. LEVEL B IS THE MINIMUM INSPECTION PROGRAM FOR EMPIRICALLY / PRESCRIPTIVELY DESIGNED MASONRY IN RISK CATEGORY IV STRUCTURES AND ENGINEERED MASONRY IN RISK CATEGORY I, II OR III STRUCTURES. LEVEL C IS THE MINIMUM INSPECTION PROGRAM FOR ENGINEERED MASONRY IN RISK CATEGORY IV STRUCTURES. ENGINEERED MASONRY STRUCTURES ARE THOSE DESIGNED IN ACCORDANCE WITH PORTIONS OF THE TMS 402-13 / ACI 530-13/ASCE 5-13 OTHER THAN PART 4 OR APPENDIX A.

INSPECTION AGENTS	FIRM NAME & POINT OF CONTACT	ADDRESS / PHONE / E-MAIL
1. SPECIAL INSPECTOR (SI-1)		
2. TESTING AGENCY (TA-1)		
3. TESTING AGENCY (TA-2)		
4. GEOTECHNICAL ENGINEER (GE-1)		
5. OTHER (O-1)		

NOTE: THE INSPECTION AND TESTING AGENT(S) MUST BE ENGAGED BY THE OWNER OR THE REGISTERED DESIGN PROFESSIONAL OF RECORD ACTING AS THE OWNER'S AGENT, AND NOT BY THE CONTRACTOR OR SUBCONTRACTOR WHOSE WORK IS TO BE INSPECTED OR TESTED. ANY CONFLICT OF INTEREST MUST BE DISCLOSED TO THE STATE CONSTRUCTION OFFICE, PRIOR TO COMMENCING WORK.

SEISMIC DESIGN CATEGORY: ☐ A ☐ B ☐ C ☐ D

BASIC WIND SPEED (V_{ASD}): ☐ 90-109 MPH ☐ 110-119 MPH ☐ >120 MPH

WIND EXPOSURE CATEGORY: ☐ B ☐ C ☐ D

STRUCTURAL STEEL AND HIGH-STRENGTH BOLTING

INSPECTION TASK		TASK REQD	FREQ	REFERENCE FOR CRITERIA: AISC 360	REFERENCE FOR CRITERIA: NCBC
1.	FABRICATOR CERTIFICATION / VERIFICATION OF QUALITY CONTROL PROCEDURES				
a.	VERIFY FABRICATOR QUALIFICATIONS	X	C		1704.2.5.1
b.	REVIEW MATERIAL TEST REPORTS & CERTIFICATIONS	X	C	N5.2	
c.	COLLECT CERTIFICATES OF COMPLIANCE FROM THE STEEL FABRICATOR AT COMPLETION OF FABRICATION	X	C		1704.5
2.	INSPECTIONS PRIOR TO HIGH-STRENGTH BOLTING AT PRETENSIONED AND SLIP-CRITICAL JOINTS				
a.	COLLECT MANUFACTURER'S CERTIFICATIONS FOR FASTENER MATERIALS	X	C	TBL N5.6-1	
b.	FASTENERS ARE MARKED PER ASTM REQUIREMENTS	X	P	TBL N5.6-1	
c.	ENSURE CORRECT FASTENERS AND BOLTING PROCEDURES ARE SELECTED FOR JOINT DETAILS	X	P	TBL N5.6-1	
d.	VERIFY CONNECTING ELEMENTS, INCLUDING THE APPROPRIATE FAYING SURFACE CONDITION AND HOLE PREPARATION WHEN SPECIFIED, COMPLY WITH THE CONSTRUCTION DOCUMENTS	X	P	TBL N5.6-1	
e.	OBSERVE AND DOCUMENT PRE-INSTALLATION VERIFICATION TESTING BY INSTALLATION PERSONAL FOR FASTENER ASSEMBLIES AND METHODS	X	P	TBL N5.6-1	
f.	VERIFY PROPER STORAGE PROVIDED FOR ALL FASTENER COMPONENTS	X	P	TBL N5.6-1	
3.	INSPECTIONS DURING HIGH-STRENGTH BOLTING AT PRETENSIONED AND SLIP-CRITICAL JOINTS				
a.	ENSURE CORRECT FASTENER ASSEMBLIES PLACED IN ALL HOLES AND WASHERS, WHEN SPECIFIED, ARE POSITIONED AS REQUIRED	X	P	TBL N5.6-2	
b.	VERIFY JOINT BROUGHT TO SNUG-TIGHT CONDITION PRIOR TO PRETENSIONING	X	P	TBL N5.6-2	
c.	VERIFY FASTENER COMPONENTS NOT TURNED BY THE WRENCH PREVENTED FROM ROTATING	X	P	TBL N5.6-2	
d.	ENSURE FASTENERS ARE PRETENSIONED IN ACCORDANCE WITH RCSC, PROGRESSING FROM THE MOST RIGID POINT TOWARDS FREE EDGES	X	P	TBL N5.6-2	
4.	DOCUMENT ACCEPTANCE OR REJECTION OF BOLTED CONNECTIONS AFTER HIGH-STRENGTH BOLTING IS COMPLETE	X	C	TBL N5.6-3	
5.	STRUCTURAL DETAILS				
a.	VERIFY DIAMETER, GRADE, TYPE AND LENGTH OF ANCHOR RODS AND OTHER EMBEDDED ITEMS SUPPORTING STRUCTURAL STEEL	X	P	N5.7	
b.	INSPECTION OF FABRICATED ASSEMBLIES & ERECTED STEEL FRAMING VERIFYING COMPLIANCE WITH THE CONSTRUCTION DOCUMENTS	X	P	N5.7	
6.	COMPOSITE CONSTRUCTION				
a.	VERIFY PLACEMENT & INSTALLATION OF STEEL DECK	X	P	TBL N6.1	
b.	OBSERVE PLACEMENT AND INSTALLATION OF STEEL HEADED STUD ANCHORS	X		TBL N6.1	
c.	DOCUMENT ACCEPTANCE OR REJECTION OF COMPOSITE CONSTRUCTION ELEMENTS	X	P	TBL N6.1	

WELDING OF STRUCTURAL STEEL

INSPECTION TASK		TASK REQD	FREQ	REFERENCE FOR CRITERIA: AISC 360	REFERENCE FOR CRITERIA: NCBC
1.	INSPECTIONS PRIOR TO WELDING			N5.4	
a.	COLLECT & REVIEW WELDING PROCEDURE SPECIFICATION (WPS) AND VERIFY MANUFACTURER CERTIFICATIONS FOR WELDING CONSUMABLES	X	C	TBL N5.4-1	
b.	CONFIRM WELD MATERIAL TYPE & GRADE	X	P	TBL N5.4-1	
c.	CONFIRM METHOD OF WELDER IDENTIFICATION	X	P	TBL N5.4-1	
d.	INSPECTION OF FIT-UP FOR GROOVE & FILLET WELDS INCLUDING ACCESS HOLE CONFIGURATION & FINISH	X	P	TBL N5.4-1	
2.	INSPECTIONS DURING WELDING			N5.4	
a.	VERIFY WELDER QUALIFICATIONS	X	P	TBL N5.4-2	
b.	VERIFY PROPER CONTROL AND HANDLING OF WELDING CONSUMABLES	X	P	TBL N5.4-2	
c.	MONITOR ENVIRONMENTAL CONDITIONS	X	P	TBL N5.4-2	
d.	MONITOR PROPER IMPLEMENTATION OF WPS	X	P	TBL N5.4-2	
e.	INSPECTION OF WELDING TECHNIQUES INCLUDING NO WELDING OVER CRACKED TACK WELDS	X	P	TBL N5.4-2	
3.	INSPECTIONS AFTER WELDING			N5.4, N5.5	
a.	VERIFY WELDS HAVE BEEN CLEANED	X	P	TBL N5.4.3	
b.	CONFIRM THE INSTALLED SIZE, LENGTH AND LOCATION OF WELDS MATCHES THE CONTRACT DOCUMENTS	X	C	TBL N5.4.3	
c.	VERIFY WELDS MEET VISUAL ACCEPTANCE CRITERIA	X	C	TBL N5.4.3	
d.	CONFIRM ARC STRIKES COMPLY WITH PART 5.28 OF AWS D1.1	X	C	TBL N5.4.3	
e.	VISUALLY OBSERVE WEB K-AREA FOR CRACKS WITHIN 3" OF WELDED DOUBLER PLATES, CONTINUITY PLATES AND STIFFENERS	X	C	TBL N5.4.3	
f.	BACKING AND WELD TABS REMOVED PER CONTRACT DOCUMENTS	X	C	TBL N5.4.3	
g.	OBSERVE AND INSPECT WELD REPAIR ACTIVITIES	X	C	TBL N5.4.3	
h.	FOR RISK CATEGORY III OR IV STRUCTURES, CONDUCT ULTRASONIC TESTING (UT) OF CJP GROOVE WELDS IN MATERIALS ≥ 5/16" AT BUTT, T- AND CORNER JOINTS SUBJECT TO TRANSVERSELY APPLIED TENSION LOADING	X	C	N5.5B, N5.5E	
i.	FOR RISK CATEGORY II STRUCTURES, CONDUCT ULTRASONIC TESTING (UT) OF CJP GROOVE WELDS IN MATERIALS ≥ 5/16" AT BUTT, T- AND CORNER JOINTS SUBJECT TO TRANSVERSELY APPLIED TENSION LOADING	☐	P	N5.5.B, N5.5F	
j.	CONDUCT MAGNETIC PARTICLE TESTING (MT) OR LIQUID PENETRANT TESTING (PT) AT THERMALLY CUT SURFACES OF ACCESS HOLES FOR ROLLED SECTION WITH TF > 2" AND BUILT-UP SHAPE WITH TW > 2"	X	C	N5.5C	
k.	RADIOGRAPHIC OR ULTRASONIC INSPECTION AT JOINTS SUBJECT TO FATIGUE	X	C	N5.5D, TBL A-3.1	
l.	DOCUMENT ACCEPTANCE / REJECTION OF WELDED JOINTS AND MEMBERS	X	C	TBL N5.4-3, N5.5G	

RETAINING WALLS EXCEEDING 5 FEET [A B C D]

INSPECTION TASK		TASK REQD	FREQ(A)	REFERENCE FOR CRITERIA: STANDARD	REFERENCE FOR CRITERIA: NCBC
1.	FOUNDATION SUPPORT SYSTEM IS ADEQUATE FOR THE INTENDED SITE CONDITIONS	X	P		1807.2.5.1
2.	VERIFY THAT RETAINING WALL MATERIALS AND INSTALLATIONS ARE IN COMPLIANCE WITH THE CONSTRUCTION DOCUMENTS	X	P		1807.2.5.2
3.	VERIFY THAT ACTUAL SOIL CONDITIONS ARE SIMILAR TO THOSE ANTICIPATED BY THE APPROVED ENGINEERED DESIGN	X	P		1807.2.5.3
4.	EXAMINATION OF BACKFILL MATERIALS FOR COMPLIANCE WITH THE APPROVED SPECIFICATIONS	X	P		1807.2.5.4
5.	CONFIRM THAT ALL SUBSOIL DRAINAGE PIPING IS UNDAMAGED, DRAINS FREELY TO THE DESIGNATED OUTLET OR STRUCTURE, AND HAS BEEN INSTALLED PER THE APPROVED ENGINEERED DESIGN	X	P		1807.2.5.4

A. ALL RETAINING WALLS EXCEEDING 5 FEET IN HEIGHT REQUIRE SPECIAL INSPECTIONS.
B. FOR CONCRETE RETAINING WALLS AND FOOTINGS, PERFORM ADDITIONAL INSPECTIONS IN ACCORDANCE WITH SECTION 1705.3 OF THE NORTH CAROLINA BUILDING CODE AND THE APPLICABLE SCHEDULES INCLUDED HEREIN
C. FOR MASONRY RETAINING WALLS, PERFORM ADDITIONAL INSPECTIONS IN ACCORDANCE WITH SECTION 1705.4 OF THE NORTH CAROLINA BUILDING CODE AND THE APPLICABLE SCHEDULES INCLUDED HEREIN
D. FOR SOILS, PERFORM ADDITIONAL INSPECTIONS IN ACCORDANCE WITH SECTION 1705.6 OF THE NORTH CAROLINA BUILDING CODE AND THE APPLICABLE SCHEDULES INCLUDED HEREIN

Susan Hatchell
Landscape Architecture, PLLC
711 W. North Street, Raleigh, NC 27603
p: 919-838-9600 f: 919-838-9700

lynchmykins now IMEG
301 N WEST STREET, SUITE 105
RALEIGH, NC 27603
919.782.1833 www.imegcorp.com

SPECIAL INSPECTIONS NC 1

LAKE MYRA COUNTY PARK
Wake County, NC

REVISIONS

9/29/2026	ADDENDUM #3

lynchmykins now IMEG
301 N WEST STREET, SUITE 105
RALEIGH, NC 27603
919.782.1833 www.imegcorp.com

IMEG RESERVES PROPRIETARY RIGHTS, INCLUDING COPYRIGHTS, TO THIS DRAWING AND THE DATA SHOWN THEREON. SAID DRAWING AND/OR DATA ARE THE EXCLUSIVE PROPERTY OF IMEG AND SHALL NOT BE USED OR REPRODUCED FOR ANY OTHER PROJECT WITHOUT THE EXPRESS WRITTEN APPROVAL AND PARTICIPATION OF IMEG.
©2025 IMEG CONSULTANTS CORP.
North Carolina Design Registration #F-1507

Date: 7/27/26

PC-S005

COLD-FORMED STEEL DECK

INSPECTION TASK	TASK REQD	FREQ	REFERENCE FOR CRITERIA	
			SDI QA/QC	NCBC
1. PRIOR TO DECK PLACEMENT, VERIFY DECK AND DECK ACCESSORIES COMPLY WITH THE CONSTRUCTION DOCUMENTS	X	C	TBL 1.1	
2. INSPECTION TASKS AFTER DECK PLACEMENT				
a. VERIFY THE INSTALLATION OF DECK & DECK ACCESSORIES COMPLIES WITH THE CONSTRUCTION DOCUMENTS	X	C	TBL 1.2	
b. VERIFY THAT DECK MATERIALS' MILL CERTIFICATIONS COMPLY WITH THE CONSTRUCTION DOCUMENTS	X	C	TBL 1.2	
3. INSPECTION TASKS PRIOR TO DECK WELDING				
a. COLLECT WELDING PROCEDURE SPECIFICATION (WPS)	X	P	TBL 1.3	
b. COLLECT MANUFACTURER CERTIFICATIONS FOR WELDING CONSUMABLES	X	P	TBL 1.3	
c. VERIFY MATERIAL TYPE AND GRADE	X	P	TBL 1.3	
d. CHECK WELDING EQUIPMENT	X	P	TBL 1.3	
4. INSPECTION TASKS DURING DECK WELDING				
a. VERIFY WELDER QUALIFICATIONS	X	P	TBL 1.4	
b. VERIFY PROPER CONTROL AND HANDLING OF WELDING CONSUMABLES	X	P	TBL 1.4	
c. MONITOR ENVIRONMENTAL CONDITIONS	X	P	TBL 1.4	
d. MONITOR PROPER IMPLEMENTATION OF WPS	X	P	TBL 1.4	
5. INSPECTION TASKS AFTER WELDING				
a. VERIFY SIZE AND LOCATION OF WELDS, INCLUDING SUPPORT, SIDELAP AND PERIMETER WELDS	X	C	TBL 1.5	
b. VERIFY WELDS MEET VISUAL ACCEPTANCE CRITERIA	X	C	TBL 1.5	
c. OBSERVE WELD REPAIR ACTIVITIES	X	C	TBL 1.5	
6. INSPECTION TASKS PRIOR TO MECHANICAL FASTENING				
a. VERIFY MANUFACTURER INSTALLATION INSTRUCTIONS AVAILABLE FOR MECHANICAL FASTENERS	X	P	TBL 1.6	
b. PROPER TOOLS AVAILABLE FOR FASTENER INSTALLATION	X	P	TBL 1.6	
c. VERIFY PROPER STORAGE OF MECHANICAL FASTENERS	X	P	TBL 1.6	
7. INSPECTION TASKS DURING MECHANICAL FASTENING				
a. OBSERVE FASTENER SPACING AND POSITION	X	P	TBL 1.7	
b. VERIFY FASTENERS ARE INSTALLED IN ACCORDANCE WITH MANUFACTURER'S INSTRUCTIONS	X	P	TBL 1.7	
8. INSPECTION TASKS AFTER MECHANICAL FASTENING				
a. CHECK SPACING, TYPE AND INSTALLATION OF SUPPORT FASTENERS	X	C	TBL 1.8	
b. CHECK SPACING, TYPE, AND INSTALLATION OF SIDELAP FASTENERS	X	C	TBL 1.8	
c. CHECK SPACING, TYPE, AND INSTALLATION OF PERIMETER FASTENERS	X	C	TBL 1.8	
d. VERIFY REPAIR ACTIVITIES	X	C	TBL 1.8	
9. DOCUMENT ACCEPTANCE OR REJECTION OF DECK & DECK ACCESSORIES FOR ALL PHASES OF CONSTRUCTION	X	C	TBLS 1.1 THRU 1.8	

CONCRETE CONSTRUCTION

INSPECTION TASK	TASK REQD	FREQ	REFERENCE FOR CRITERIA	
			STANDARD[A]	NCBC
1. INSPECT REINFORCEMENT, INCLUDING PRESTRESSING TENDONS, AND VERIFY PLACEMENT	X	P	ACI CH.20, 25.2, 25.3, 26.6.1-26.6.3	1908.4
2. REINFORCING BAR WELDING:			AWS D1.4	
a. VERIFY WELDABILITY OF REINFORCING BARS OTHER THAN ASTM A706 AND COLLECT REPORTS	X	P	ACI 26.6.4	1704.5
b. INSPECT SINGLE-PASS FILLET WELDS ≤ 5/16"	X	P	ACI 26.6.4	
c. INSPECT ALL WELDS OTHER THAN SINGLE-PASS FILLET WELDS ≤ 5/16"	X	C	ACI 26.6.4	
3. CONCRETE ANCHORS:				
a. INSPECT ANCHORS CAST IN CONCRETE	X	P	ACI 17.8.2	
b. INSPECT ADHESIVE ANCHORS INSTALLED IN HARDENED CONCRETE WITH HORIZONTALLY OR UPWARDLY INCLINED ORIENTATIONS THAT RESIST SUSTAINED TENSION LOADS	X	C	ACI 17.8.2.4	
c. INSPECT ADHESIVE ANCHORS INSTALLED IN HARDENED CONCRETE WITH ORIENTATIONS DIFFERENT FROM ITEM 3.B	X	P	ACI 17.8.2	
d. INSPECT MECHANICAL ANCHORS INSTALLED IN HARDENED CONCRETE	X	P	ACI 17.8.2	
4. COLLECT MIX DESIGNS AND VERIFY THE CORRECT MIX USED DURING INSTALLATION	X	P	ACI CH 19, 26.4.3, 26.4.4	1904.1, 1904.2, 1908.2, 1908.3
5. PRIOR TO CONCRETE PLACEMENT, FABRICATE SPECIMENS FOR STRENGTH TESTS, PERFORM SLUMP AND AIR CONTENT TESTS, AND DETERMINE THE TEMPERATURE OF THE CONCRETE	X	C	ASTM C172, ASTM C31, ACI 26.4, 26.12	1908.10
6. INSPECT CONCRETE AND SHOTCRETE PLACEMENT FOR PROPER APPLICATION TECHNIQUES	X	C	ACI 26.5	1908.6, 1908.7, 1908.8
7. COLLECT REPORTS OF PRECONSTRUCTION TESTS FOR SHOTCRETE WHEN PRECONSTRUCTION TESTS ARE REQUIRED BY NCBC SECTION 1908.4	X	C		1704.5, 1908.5
8. VERIFY MAINTENANCE OF SPECIFIED CURING TEMPERATURE AND TECHNIQUES	X	P	ACI 26.5.3-26.5.5	1908.9
9. INSPECTIONS FOR PRESTRESSED CONCRETE				
a. OBSERVE APPLICATION OF PRESTRESSING FORCE	X	C	ACI 26.10	
b. INSPECT GROUTING OF BONDED PRESTRESSING TENDONS	X	C	ACI 26.10	
10. VERIFY CONCRETE STRENGTH PRIOR TO STRESSING OF PT TENDONS AND PRIOR TO REMOVAL OF SHORES AND FORMS FROM PT & MILD BEAMS AND STRUCTURAL SLABS	X	P	ACI 26.11.2	
11. INSPECT ERECTION OF PRECAST MEMBERS	X	P	ACI 26.8	
12. INSPECT FORMWORK FOR SHAPE, LOCATION AND DIMENSIONS OF THE CONCRETE MEMBER BEING FORMED	X	P	ACI 26.11.1.2(B)	
13. COLLECT MILL TEST REPORTS FOR ASTM A615 REBAR USED BY SFRS SPECIAL MOMENT FRAMES, SPECIAL STRUCTURAL WALLS OR COUPLING BEAMS	X	C	ACI 20.2.2.5	1704.5

A. REFERENCES TO "ACI" IN THIS TABLE ARE TO THE ACI 318-14.

MASONRY - LEVEL C

INSPECTION TASK	TASK REQD	FREQ	REFERENCE FOR CRITERIA	
			TMS 402[A]	TMS 602[A]
1. TEST & VERIFY F'M & F'AAC PRIOR TO CONSTRUCTION & FOR EVERY 5,000 SQUARE FEET DURING CONSTRUCTION	X	C	TBL 3.1.3	ART. 1.5
2. TEST & VERIFY PROPORTIONS OF MATERIALS IN PREMIXED / PREBLENDED MORTAR, PRESTRESSING GROUT, AND GROUT OTHER THAN SELF-CONSOLIDATING, AS DELIVERED TO SITE	X	C	TBL 3.1.3	
3. TEST & VERIFY SLUMP FLOW & VISUAL STABILITY INDEX AS DELIVERED TO SITE FOR SELF-CONSOLIDATING GROUT	X	C	TBL 3.1.3	ART. 1.5B.1.b.3
4. VERIFY COMPLIANCE WITH THE APPROVED SUBMITTALS	X	P	TBL 3.1.3	ART. 1.5
5. VERIFY THAT THE FOLLOWING ARE IN COMPLIANCE:				
a. PROPORTIONS OF SITE-MIXED MORTAR, GROUT AND PRESTRESSING GROUT FOR BONDED TENDONS	X	P		ART. 2.1, 2.6A, 2.6B, 2.6C, 2.4G.1.b
b. GRADE, TYPE, & SIZE OF REINFORCEMENT & ANCHOR BOLTS, & PRESTRESSING TENDONS & ANCHORAGE	X	P	SEC 6.1	ART. 2.4, 3.4
c. PLACEMENT OF MASONRY UNITS AND CONSTRUCTION OF MORTAR JOINTS	X	P		ART. 3.3B
d. PLACEMENT OF REINFORCEMENT, CONNECTORS, AND PRESTRESSING TENDONS AND ANCHORAGES	X	C	SEC 6.1, 6.2.1, 6.2.6, 6.2.7	ART. 3.2E, 3.4, 3.6A
e. GROUT SPACE IS CLEAN, AND CLEANOUTS PROVIDED WHEN REQUIRED	X	P		ART. 3.2D, 3.2F
f. PLACEMENT OF GROUT AND PRESTRESSING GROUT FOR BONDED TENDONS	X	C		ART. 3.5, 3.6C
g. SIZE AND LOCATION OF STRUCTURAL ELEMENTS	X	P		ART. 3.3F
h. TYPE, SIZE, AND LOCATION OF ANCHORS INCLUDING OTHER DETAILS OF ANCHORAGE OF MASONRY TO STRUCTURAL MEMBERS, FRAMES, OR OTHER CONSTRUCTION	X	C	SEC 1.2.1(E), 6.1.4.3, 6.2.1	
i. WELDING OF REINFORCEMENT	X	C	SEC 8.1.6.7.2, 9.3.3.4(C), 11.3.3.4(B)	
j. PREPARATION, CONSTRUCTION, AND PROTECTION OF MASONRY DURING COLD WEATHER (TEMPERATURE < 40°F) OR HOT WEATHER (TEMPERATURE > 90°F)	X	P		ART. 1.8C, 1.8D
k. APPLICATION AND MEASUREMENT OF PRESTRESSING FORCE	X	C		ART. 3.6B
l. PLACEMENT OF AAC MASONRY UNITS AND CONSTRUCTION OF THIN-BED MORTAR JOINTS	X	C		ART. 3.3B.9, 3.3F.1.b
m. PROPERTIES OF THIN-BED MORTAR FOR AAC MASONRY	X	C		ART. 2.1C.1
6. OBSERVE PREPARATION OF GROUT SPECIMENS, MORTAR SPECIMENS, AND OR PRISMS	X	C		ART. 1.4B.2.a.3, 1.4B.2.b.3, 1.4B.2.c.3, 1.4B.3, 1.4B.4

A. REFERENCES TO "TMS402" IN THIS TABLE ARE TO THE TMS402/ACI530/ASCE5-13. REFERENCES TO "TMS602" ARE TO TMS602/ACI530.1/ASCE6-13.

Susan Hatchell
Landscape Architecture, PLLC
711 W. North Street, Raleigh, NC 27603
p: 919-838-9600 f: 919-838-9700

lynchmykins now IMEG
301 N WEST STREET, SUITE 105
RALEIGH, NC 27603
919.782.1833 www.imegcorp.com

SPECIAL INSPECTIONS NC 1

LAKE MYRA COUNTY PARK
Wake County, NC

REVISIONS

9/29/2026	ADDENDUM #3

Date: 7/27/26

PC-S006

lynchmykins now IMEG
301 N WEST STREET, SUITE 105
RALEIGH, NC 27603
919.782.1833 www.imegcorp.com

IMEG RESERVES PROPRIETARY RIGHTS, INCLUDING COPYRIGHTS, TO THIS DRAWING AND THE DATA SHOWN THEREON. SAID DRAWING AND/OR DATA ARE THE EXCLUSIVE PROPERTY OF IMEG AND SHALL NOT BE USED OR REPRODUCED FOR ANY OTHER PROJECT WITHOUT THE EXPRESS WRITTEN APPROVAL AND PARTICIPATION OF IMEG. ©2025 IMEG CONSULTANTS CORP.
North Carolina Design Registration #F-1507

MASONRY - LEVEL A

	INSPECTION TASK	TASK REQD	FREQ	REFERENCE FOR CRITERIA	
				TMS 402[A]	TMS 602[A]
1.	PRIOR TO CONSTRUCTION, VERIFY CERTIFICATES OF COMPLIANCE USED IN MASONRY CONSTRUCTION	☒	P	TBL 3.1.1	ART. 1.5

A. REFERENCES TO "TMS402" IN THIS TABLE ARE TO THE TMS402/ACI530/ASCE5-13. REFERENCES TO "TMS602" ARE TO TMS602/ACI530.1/ASCE6-13.

MASONRY - LEVEL B

	INSPECTION TASK	TASK REQD	FREQ	REFERENCE FOR CRITERIA	
				TMS 402[A]	TMS 602[A]
1.	TEST & VERIFY SLUMP FLOW & VISUAL STABILITY INDEX AS DELIVERED TO SITE FOR SELF-CONSOLIDATING GROUT	☒	C	TBL 3.1.2	ART. 1.5B.1.B.3
2.	TEST & VERIFY F'M & F'AAC PRIOR TO CONSTRUCTION	☒	C	TBL 3.1.2	ART. 1.4B
3.	VERIFY COMPLIANCE WITH THE APPROVED SUBMITTALS	☒	P	TBL 3.1.2	ART. 1.5
4.	AS MASONRY CONSTRUCTION BEGINS, VERIFY THAT THE FOLLOWING ARE IN COMPLIANCE:				
	a. PROPORTIONS OF SITE-PREPARED MORTAR	☒	P		ART. 2.1, 2.6A
	b. CONSTRUCTION OF MORTAR JOINTS	☒	P		ART. 3.3B
	c. GRADE AND SIZE OF PRESTRESSING TENDONS AND ANCHORAGES	☒	P		ART. 2.4B, 2.4H
	d. LOCATION OF REINFORCEMENT, CONNECTORS AND PRESTRESSING TENDONS AND ANCHORAGES	☒	P		ART. 3.4, 3.6A
	e. PRESTRESSING TECHNIQUE	☒	P		ART. 3.6B
	f. TEST & VERIFY F'M & F'AAC PRIOR TO CONSTRUCTION	☒	C/P[A]		ART. 2.1C
5.	PRIOR TO GROUTING, VERIFY THAT THE FOLLOWING COMPLY:	☒			
	a. GROUT SPACE IS CLEAN, AND CLEANOUTS PROVIDED WHEN REQUIRED	☒	P		ART. 3.2D, 3.2F
	b. GRADE, TYPE & SIZE OF REINFORCEMENT & ANCHOR BOLTS, & PRESTRESSING TENDONS & ANCHORAGE	☒	P	SEC 6.1	ART. 2.4, 3.4
	c. PLACEMENT OF REINFORCEMENT, CONNECTORS, AND PRESTRESSING TENDONS AND ANCHORAGE	☒	P	SEC 6.1, 6.2.1 ,6.2.6, 6.2.7	ART. 3.2E, 3.4, 3.6A
	d. PROPORTIONS OF SITE-PREPARED GROUT AND PRESTRESSING GROUT FOR BONDED TENDONS	☒	P		ART. 2.6B, 2.4G.1.B
	e. CONSTRUCTION AND SIZE OF MORTAR JOINTS	☒	P		ART. 3.3B
6.	VERIFY DURING CONSTRUCTION:				
	a. SIZE AND LOCATION OF STRUCTURAL ELEMENTS	☒	P		ART. 3.3F
	b. TYPE, SIZE, AND LOCATION OF ANCHORS, INCLUDING OTHER DETAILS OF ANCHORAGE OF MASONRY TO STRUCTURAL MEMBERS, FRAMES, OR OTHER CONSTRUCTION	☒	P	SEC1.2.1(E), 6.1.4.3, 6.2.1	
	c. WELDING OF REINFORCEMENT	☒	C	SEC 8.1.6.7.2, 9.3.3.4(C), 11.3.3.4(B)	
	d. PREPARATION, CONSTRUCTION, AND PROTECTION OF MASONRY DURING COLD WEATHER (TEMPERATURE < 40°F) OR HOT WEATHER (TEMPERATURE > 90°F)	☒	P		ART. 1.8C, 1.8D
	e. APPLICATION & MEASUREMENT OF PRESTRESS FORCE	☒	C		ART. 3.6B
	f. VERIFY PLACEMENT OF GROUT AND PRESTRESSING GROUT FOR BONDED TENDONS	☒	C		ART. 3.5. 3.6C
	g. PLACEMENT OF AAC MASONRY UNITS AND CONSTRUCTION OF THIN-BED MORTAR JOINTS	☒	C/P[A]		ART. 3.3B.9, 3.3F.1.B
7.	OBSERVE PREPARATION OF GROUT SPECIMENS, MORTAR SPECIMENS, AND OR PRISMS	☒	P		ART. 1.4.B.2.A.3, 1.4.B.2.B.3, 1.4.B.2.C.3, 1.4.B.3, 1.4.B.4

A. REFERENCES TO "TMS402" IN THIS TABLE ARE TO THE TMS402/ACI530/ASCE5-13. REFERENCES TO "TMS602" ARE TO TMS602/ACI530.1/ASCE6-13.
B. AAC MASONRY MUST BE CONTINUOUSLY INSPECTED FOR THE FIRST 5000-SQUARE FEET AND PERIODICALLY INSPECTED AFTERWARDS.

WOOD CONSTRUCTION

	INSPECTION TASK	TASK REQD	FREQ	REFERENCE FOR CRITERIA	
				STANDARD	NCBC
1.	FABRICATOR CERTIFICATION / VERIFICATION OF QUALITY CONTROL PROCEDURES FOR PREFABRICATED WOOD STRUCTURAL ELEMENTS AND ASSEMBLIES				
	a. VERIFY FABRICATOR QUALIFICATIONS	☒	C		1704.2.5.1, 1705.5
	b. COLLECT CERTIFICATES OF COMPLIANCE FROM THE FABRICATOR AT COMPLETION OF FABRICATION	☒	C		1704.5, 1705.5
2.	HIGH-LOAD DIAPHRAGMS				2306.2
	a. VERIFY THAT WOOD STRUCTURAL PANEL SHEATHING IS THE CORRECT GRADE AND THICKNESS	☒	P		1705.5.1
	b. VERIFY NOMINAL SIZE OF FRAMING MEMBERS AND BLOCKING AT ADJOINING PANEL EDGES	☒	P	AWC-SDPWS 4.2.7.1.2	1705.5.1
	c. NAIL AND OR STAPLE DIAMETER, LENGTH, QUANTITY AND SPACING COMPLY WITH THE CONTRACT DOCUMENTS	☒	P		1705.5.1
3.	FOR METAL-PLATE-CONNECTED TRUSSES CLEAR SPANNING 60 FEET OR MORE, VERIFY THAT BOTH TEMPORARY AND PERMANENT RESTRAINTS AND BRACES ARE INSTALLED IN ACCORDANCE WITH THE APPROVED TRUSS SUBMITTAL PACKAGE	☒	P		1705.5.2

SOILS

	INSPECTION TASK	TASK REQD	FREQ	REFERENCE FOR CRITERIA	
				STANDARD	NCBC
1.	VERIFY MATERIALS BELOW SHALLOW FOUNDATIONS ARE ADEQUATE TO ACHIEVE THE DESIGN BEARING CAPACITY	☒	P		1705.6
2.	VERIFY EXCAVATIONS EXTEND TO PROPER DEPTH AND HAVE REACHED THE CORRECT SOIL MATERIAL	☒	P		1705.6
3.	PERFORM CLASSIFICATION AND TESTING OF COMPACTED FILL MATERIALS	☒	P		1705.6
4.	VERIFY THAT MATERIALS USED, DENSITIES, LIFT THICKNESS AND PROCEDURES USED DURING PLACEMENT AND COMPACTION OF COMPACTED FILL ARE IN ACCORDANCE WITH THE APPROVED SOILS REPORT AND THE CONSTRUCTION DOCUMENTS	☒	C		1705.6
5.	PRIOR TO PLACEMENT OF COMPACTED FILL, VERIFY THAT THE SUBGRADE HAS BEEN PREPARED IN ACCORDANCE WITH THE APPROVED SOILS REPORT AND THE CONSTRUCTION DOCUMENTS	☒	P		1705.6

SPRAYED FIRE-RESISTANT MATERIALS[A]

	INSPECTION TASK	TASK REQD	FREQ	REFERENCE FOR CRITERIA	
				STANDARD	NCBC
1.	PRIOR TO THE APPLICATION OF SPRAYED ON FIRE RESISTANT MATERIALS, VERIFY STRUCTURAL MEMBER SURFACES ARE PREPARED IN ACCORDANCE WITH THE APPROVED FIRE-RESISTANCE DESIGN AND THE WRITTEN INSTRUCTIONS OF THE APPROVED MANUFACTURER	☒	P		1705.14.2
2.	DURING THE APPLICATION OF SPRAYED ON FIRE RESISTANT MATERIALS, VERIFY THAT THE FOLLOWING ARE IN COMPLIANCE:				
	a. SUBSTRATE HAS MINIMUM AMBIENT TEMPERATURE BEFORE AND AFTER APPLICATION AS SPECIFIED BY THE FIRE RESISTANCE DESIGN AND APPROVED MANUFACTURER'S WRITTEN INSTRUCTIONS	☒	P		1705.14.3
	b. WORK AREA PROPERLY VENTILATED DURING AND AFTER APPLICATION	☒	P		1705.14.3
	c. THICKNESS OF SPRAYED ON MATERIAL CONFORMS WITH THE APPROVED FIRE RESISTANCE DESIGN AND NCBC MINIMUMS	☒	P		1705.14.4, 1705.14.4.4, 1705.14.4.5, 1705.14.4.6, 1705.14.4.7, 1705.14.4.8, 1705.14.4.9
	d. THE DENSITY OF SPRAYED ON MATERIALS IS NOT LESS THAN THE REQUIREMENTS OF THE APPROVED FIRE-RESISTANCE DESIGN	☒	P		1705.14.5
	e. THE COHESIVE / ADHESIVE BOND STRENGTH IS NOT LESS THAN 150 POUNDS PER SQUARE FOOT	☒	P		1705.14.6

A. INSPECTIONS MUST BE PERFORMED AFTER THE ROUGH INSTALLATION OF ELECTRICAL, AUTOMATIC SPRINKLER, MECHANICAL AND PLUMBING SYSTEMS, AND SUSPENSION SYSTEMS FOR CEILINGS.

MASTIC AND INTUMESCENT FIRE-RESISTANT COATINGS

	INSPECTION TASK	TASK REQD	FREQ	REFERENCE FOR CRITERIA	
				STANDARD	NCBC
1.	PRIOR TO APPLICATION, VERIFY PREPARATION OF SUBSTRATE AND SUITABILITY OF PRIMERS, IF PRESENT, ARE IN ACCORDANCE WITH APPROVED FIRE RESISTANCE DESIGN, APPROVED MANUFACTURER'S WRITTEN INSTRUCTIONS, AND THE REQUIREMENTS OF AWCI 12-B	☒	P	AWCI 12-B	1705.15
2.	OBSERVE THE APPLICATION OF FIRE-RESISTANT COATINGS ENSURING COMPLIANCE WITH APPROVED FIRE RESISTANCE DESIGN, APPROVED MANUFACTURER'S WRITTEN INSTRUCTIONS, AND THE REQUIREMENTS OF AWCI 12-B	☒	P	AWCI 12-B	1705.15
3.	AFTER ADEQUATE DRYING BUT PRIOR TO THE APPLICATION OF ANY TOPCOAT, MEASURE THE FINAL MASTIC / INTUMESCENT MATERIAL THICKNESS ENSURING COMPLIANCE WITH THE CONSTRUCTION DOCUMENTS AND APPROVED MATERIAL / INSTALLATION SUBMITTALS. MEASUREMENTS MUST CONSIDER THE THICKNESS OF PRIMERS OR OTHER EXISTING COATINGS ON THE SURFACE OF THE SUBSTRATE.	☒	P	AWCI 12-B	1705.15

FIRE-RESISTANT PENETRATIONS AND JOINTS[A]

	INSPECTION TASK	TASK REQD	FREQ	REFERENCE FOR CRITERIA	
				STANDARD	NCBC
1.	INSPECT THROUGH-PENETRATION FIRESTOP SYSTEMS AT FIRE WALLS, FIRE BARRIERS, SMOKE BARRIERS AND FIRE PARTITION WALLS IN ACCORDANCE WITH ASTM E2174	☒	P		1705.17.1, 714.3.1.2
2.	INSPECT PENETRATION FIRESTOP SYSTEMS AT PENETRATIONS THROUGH MEMBRANES THAT ARE PART OF A HORIZONTAL ASSEMBLY IN ACCORDANCE WITH ASTM E2174	☒	P		1705.17.1, 714.4.2
3.	INSPECT FIRE-RESISTANT JOINT SYSTEMS IN ACCORDANCE WITH ASTM 2393	☒	P		1705.17.2, 715.3, 715.4

A. THE INSPECTION OF FIRE-RESISTANT PENETRATIONS AND JOINTS APPLIES ONLY TO HIGH-RISE BUILDINGS OR BUILDINGS ASSIGNED TO RISK CATEGORY III OR IV.

SMOKE CONTROL

	INSPECTION TASK	TASK REQD	FREQ	REFERENCE FOR CRITERIA	
				STANDARD	NCBC
1.	DURING ERECTION OF DUCTWORK AND PRIOR TO CONCEALMENT, PERFORM LEAKAGE TESTING AND RECORD DEVICE LOCATION(S)	☒	P		1705.18.1.1
2.	UPON COMPLETION OF SMOKE CONTROL SYSTEM, PERFORM PRESSURE DIFFERENCE TESTING, FLOW MEASUREMENTS, AND DETECTION AND CONTROL VERIFICATION	☒	P		1705.18.1.2

SPECIAL INSPECTIONS FOR WIND RESISTANCE

	INSPECTION TASK	TASK REQD	FREQ	REFERENCE FOR CRITERIA	
				STANDARD	NCBC
1.	PRIOR TO ANY WORK TAKING PLACE, EACH CONTRACTOR RESPONSIBLE FOR THE CONSTRUCTION OF A WIND-RESISTING SYSTEM OR COMPONENT MUST SUBMIT A WRITTEN STATEMENT OF CONTRACTOR RESPONSIBILITY	☒	C		1704.4
2.	STRUCTURAL WOOD				
	a. VERIFY FIELD GLUING OPERATIONS PERTINENT TO THE MAIN WIND FORCE-RESISTING SYSTEM	☒	C		1705.11.1
	b. INSPECT NAILING, ANCHORING, AND FASTENING OF COMPONENTS WITHIN THE MAIN WINDFORCE-RESISTING SYSTEM INCLUDING SHEAR WALLS, DIAPHRAGMS, DRAG STRUTS, BRACES & HOLDDOWNS	☒	P		1705.11.1
3.	COLD-FORMED STEEL LIGHT FRAME CONSTRUCTION				
	a. INSPECT WELDING OPERATIONS AT ELEMENTS OF THE MAIN WINDFORCE-RESISTING SYSTEM	☒	P		1705.11.2
	b. INSPECT SCREW ATTACHMENT, BOLTING, ANCHORING, AND FASTENING OF ELEMENTS WITHIN THE MAIN WINDFORCE-RESISTING SYSTEM INCLUDING SHEAR WALLS, BRACES, DIAPHRAGMS COLLECTORS, DRAG STRUTS AND HOLD-DOWNS	☒	P		1705.11.2
4.	WIND-RESISTING COMPONENTS				
	a. INSPECT THE FASTENING OF ROOF COVERING, ROOF DECK AND SUPPORTING ROOF FRAMING CONNECTIONS	☒	P		1705.11.3.1
	b. INSPECT THE FASTENING OF EXTERIOR WALL COVERINGS & THE WALL CONNECTIONS TO THE ROOF / FLOOR DIAPHRAGMS & FRAMING MEMBERS	☒	P		1705.11.3.2

STRUCTURAL WOOD AND COLD-FORMED STEEL LIGHT-FRAME CONSTRUCTION MAIN WIND-FORCE RESISTING SYSTEM(S) SUBJECT TO SPECIAL INSPECTIONS:

EOR TO COMPLETE

ROOF CLADDING COMPONENTS AND CONNECTIONS SUBJECT TO SPECIAL INSPECTIONS:

EOR TO COMPLETE

WALL CLADDING COMPONENTS AND CONNECTIONS SUBJECT TO SPECIAL INSPECTIONS:

EOR TO COMPLETE

Susan Hatchell
Landscape Architecture, PLLC
711 W. North Street, Raleigh, NC 27603
p: 919-838-9600 f: 919-838-9700

lynchmykins now IMEG
301 N WEST STREET, SUITE 105
RALEIGH, NC 27603
919.782.1833 www.imegcorp.com

SPECIAL INSPECTIONS NC 2

LAKE MYRA COUNTY PARK
Wake County, NC

REVISIONS

9/29/2026	ADDENDUM #3

lynchmykins now IMEG
301 N WEST STREET, SUITE 105
RALEIGH, NC 27603
919.782.1833 www.imegcorp.com

IMEG RESERVES PROPRIETARY RIGHTS, INCLUDING COPYRIGHTS, TO THIS DRAWING AND THE DATA SHOWN THEREON. SAID DRAWING AND/OR DATA ARE THE EXCLUSIVE PROPERTY OF IMEG AND SHALL NOT BE USED OR REPRODUCED FOR ANY OTHER PROJECT WITHOUT THE EXPRESS WRITTEN APPROVAL AND PARTICIPATION OF IMEG.
©2025 IMEG CONSULTANTS CORP.
North Carolina Design Registration #F-1501

Date: 7/27/26

PC-S007

WALL FOOTING SCHEDULE

MARK	SIZE		REINFORCING		REMARKS
	WIDTH	DEPTH	CONTINUOUS	TRANSVERSE	
WF2	2' - 0"	1'-0"	(3) #5 BOT	#4 AT 36" OC BOT	-
WF2.5	2' - 6"	1'-0"	(3) #5 BOT	#4 AT 36" OC BOT	-
WF3	3' - 0"	1'-0"	(4) #5 BOT	#4 AT 36" OC BOT	-
WF4	4' - 0"	1'-0"	(5) #5 BOT	#4 AT 36" OC BOT	-
WF6	6' - 0"	1'-0"	(7) #5 BOT	#4 AT 24" OC BOT	-
WF7	7' - 0"	1'-6"	(8) #6 TOP & BOT	#6 AT 12" OC TOP & BOT	-

MASONRY WALL REINFORCING SCHEDULE

MARK	WALL TYPE	REINFORCING	REMARKS
M1	8" CMU	#5 AT 32"OC	
M2	8" CMU	#5 AT 24"OC	
M3	8" CMU	#5 AT 16"OC	

CONCRETE WALL REINFORCING SCHEDULE

MARK	WALL THICKNESS	VERTICAL REINFORCING	REMARKS
CW1	16"	#6 @ 15" OC EF	#6 @ 12" OC EF
CW2	12"	#6 @ 15" OC EF	#6 @ 12" OC EF

KEY NOTES

101 4" CONCRETE SLAB-ON-GRADE OVER VAPOR RETARDER AND 4" DEPTH OF POROUS FILL. REINFORCE WITH 6x6 W2.1xW2.1 WELDED WIRE REINFORCING.

110 SEE CIVIL DRAWINGS FOR ADJACENT SITE WALL CONSTRUCTION. PROVIDE CONSTRUCTION JOINT AT INTERFACE BETWEEN SCOPES OF WORK.

111 CONCRETE STAIR-ON-GRADE. REFERENCE TYPICAL DETAILS.

FOUNDATION PLAN NOTES

A. REFERENCE ARCHITECTURAL DRAWINGS FOR DIMENSIONS TO NONBEARING WALLS, WALL CONTROL JOINTS AND OPENINGS.

B. UNLESS OTHERWISE NOTED, ALL ELEVATIONS ARE BASED ON A FINISHED FIRST FLOOR REFERENCE OF 0'-0". ACTUAL FINISHED FLOOR ELEVATION IS XX.XX'. FINISHED FLOOR ELEVATIONS AT EACH LEVEL ARE INDICATED ON SLAB PLANS. REFERENCE ARCHITECTURAL DRAWINGS FOR FINISHED FLOOR MATERIALS.

C. TOP OF ALL COLUMN AND WALL FOOTINGS MUST BE AT THE FOLLOWING ELEVATIONS UNLESS OTHERWISE NOTED ON PLAN. EXTERIOR WALL AND COLUMN FOOTINGS -1'-4". INTERIOR WALL FOOTINGS -0'-8".

D. NOT ALL UTILITY LOCATIONS ARE SHOWN ON PLAN. THE CONTRACTOR MUST COORDINATE THE LOCATIONS, SIZES, AND INVERTS OF UTILITIES. AT LOCATIONS WHERE UTILITIES PASS BELOW THE TOP OF FOOTING ELEVATION, STEP THE TOP OF FOOTING DOWN ON EACH SIDE PER THE "TYPICAL STEPPED FOOTING DETAIL" AND SLEEVE THE UTILITY THROUGH THE FOUNDATION WALL. THE CONTRACTOR MAY, AT HIS/HER OPTION, SLEEVE THE UTILITY THROUGH THE FOUNDATION PER THE "TYPICAL PIPE SLEEVE AT WALL FOOTING DETAILS."

E. UNLESS OTHERWISE INDICATED, EXTEND WALL FOOTINGS A MINIMUM OF 6 INCHES BEYOND ENDS OF WALLS.

F. NOT ALL SITE WALLS ARE SHOWN ON PLAN. CONTRACTOR MUST COORDINATE CIVIL AND LANDSCAPE DRAWINGS FOR SITE WALL INFORMATION.

G. DIMENSIONS SHOWN ON FOUNDATION PLAN ARE TO COLUMN GRIDLINES AND FACE OF FOUNDATION WALLS, UNLESS OTHERWISE NOTED.

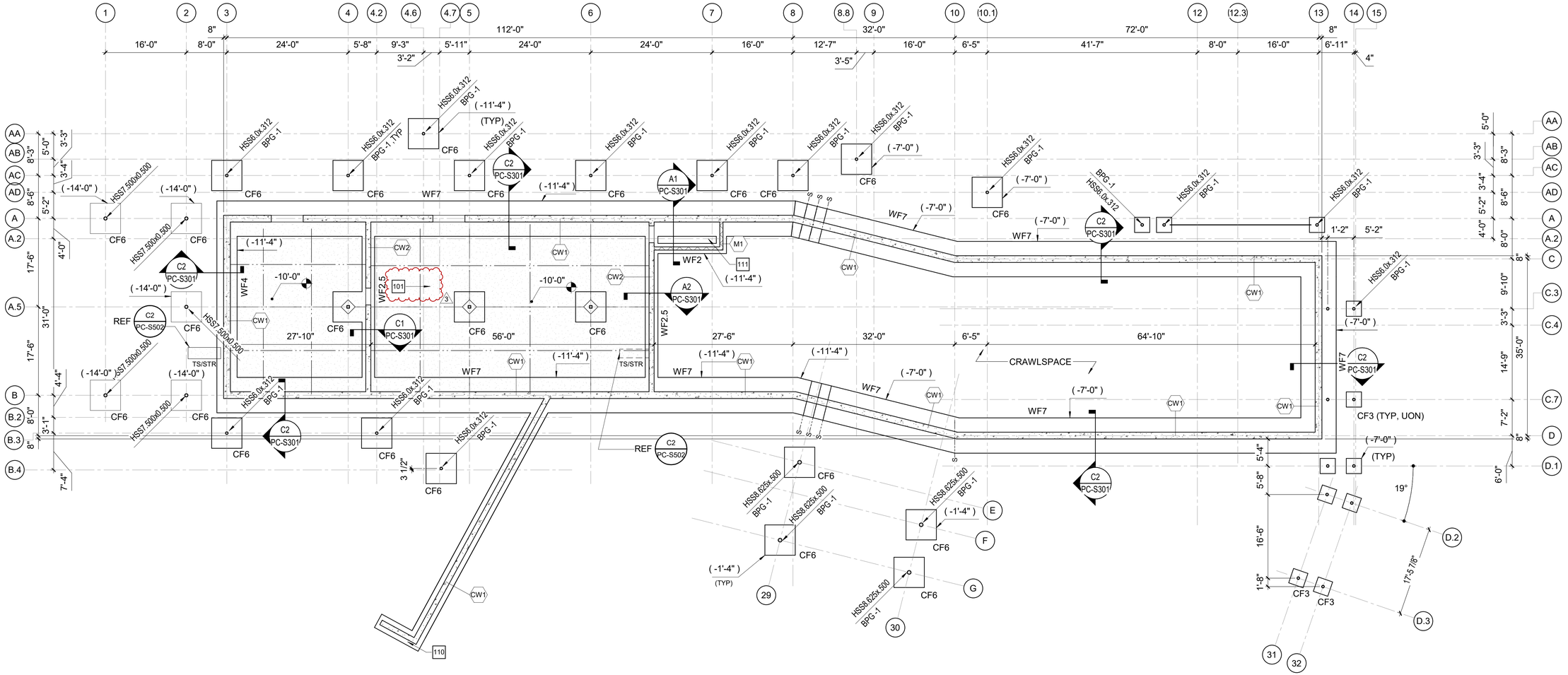

A1 PARK CENTER - BASEMENT / CRAWL SPACE FOUNDATION PLAN
1" = 10'-0"

Susan Hatchell
Landscape Architecture, PLLC
711 W. North Street, Raleigh, NC 27603
p: 919-838-9600 f: 919-838-9700

lynchmykins now IMEG
301 N WEST STREET, SUITE 105
RALEIGH, NC 27603
919.782.1833 www.imegcorp.com

PARK CENTER
BASEMENT
FOUNDATION AND
SLAB PLAN

LAKE MYRA COUNTY PARK
Wake County, NC

REVISIONS

9/29/2026	ADDENDUM #3

Date: 7/27/26

PC-S101

lynchmykins now IMEG
301 N WEST STREET, SUITE 105
RALEIGH, NC 27603
919.782.1833 www.imegcorp.com

IMEG RESERVES PROPRIETARY RIGHTS, INCLUDING COPYRIGHTS, TO THIS DRAWING AND THE DATA SHOWN THEREON. SAID DRAWING AND/OR DATA ARE THE EXCLUSIVE PROPERTY OF IMEG AND SHALL NOT BE USED OR REPRODUCED FOR ANY OTHER PROJECT WITHOUT THE EXPRESS WRITTEN APPROVAL AND PARTICIPATION OF IMEG.
©2025 IMEG CONSULTANTS CORP.
North Carolina Design Registration #F-1507

KEY NOTES

112	2" LW CONCRETE TOPPING ON 2" METAL DECK W/ WWF
201	5/4" WOOD-PLASTIC COMPOSITE DECKING BOARDS ON 2x10 PRESSURE TREATED JOISTS AT 16" ON CENTER - TYPICAL AT EXTERIOR DECK.
205	WOOD 2x10 JOISTS AT 16" OC, TYP AT EXTERIOR DECK

FRAMING PLAN NOTES

A. REFERENCE FOUNDATION PLAN AND ARCHITECTURAL DRAWINGS FOR DIMENSIONS NOT SHOWN.

B. TOP OF FINISHED FLOOR ELEVATION MUST BE AS NOTED ON SLAB PLANS.

C. COMPOSITE STEEL BEAM FRAMING MUST BE EQUALLY SPACED BETWEEN POINTS OF KNOWN DIMENSIONS (NOT TO EXCEED 8'-0" ON-CENTER).

D. CONCRETE ON ELEVATED METAL DECKS MUST BE POURED TO THE THICKNESS INDICATED.

E. AT STEEL ROOF FRAMING, BOTTOM OF DECK ELEVATIONS ARE SHOWN ON PLAN. INTERMEDIATE ELEVATIONS MUST BE STRAIGHT LINES BETWEEN GIVEN ELEVATIONS. INTERPOLATE AS REQUIRED FOR INTERMEDIATE BEARING ELEVATIONS, UNLESS OTHERWISE NOTED.

F. COORDINATE AND VERIFY ALL MEMBER LOCATIONS, DIMENSIONS, WEIGHTS, OPENING SIZES, AND CURB DIMENSIONS FOR ALL MECHANICAL EQUIPMENT WITH THE ACTUAL EQUIPMENT FURNISHED. INCLUDE THIS INFORMATION ON THE JOIST AND STRUCTURAL STEEL SHOP DRAWINGS.

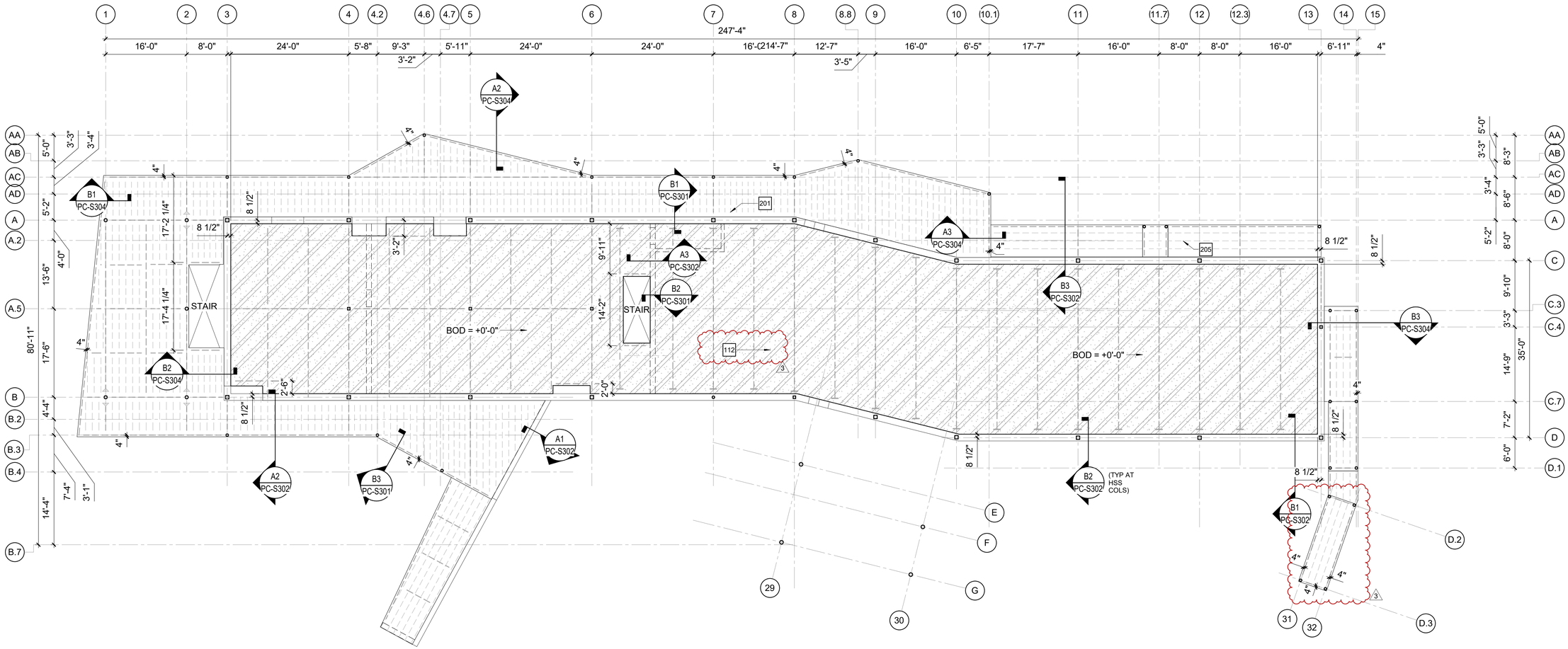

A1 PARK CENTER - FIRST FLOOR SLAB PLAN
1" = 10'-0"

Susan Hatchell
Landscape Architecture, PLLC
711 W. North Street, Raleigh, NC 27603
p: 919-838-9600 f: 919-838-9700

lynchmykins now IMEG
301 N WEST STREET, SUITE 105
RALEIGH, NC 27603
919.782.1833 www.imegcorp.com

PARK CENTER FIRST FLOOR SLAB PLAN

LAKE MYRA COUNTY PARK
Wake County, NC

REVISIONS

9/29/2026	ADDENDUM #3

Date: 7/27/26

PC-S102

lynchmykins now IMEG
301 N WEST STREET, SUITE 105
RALEIGH, NC 27603
919.782.1833 www.imegcorp.com

IMEG RESERVES PROPRIETARY RIGHTS, INCLUDING COPYRIGHTS, TO THIS DRAWING AND THE DATA SHOWN THEREON. SAID DRAWING AND/OR DATA ARE THE EXCLUSIVE PROPERTY OF IMEG AND SHALL NOT BE USED OR REPRODUCED FOR ANY OTHER PROJECT WITHOUT THE EXPRESS WRITTEN APPROVAL AND PARTICIPATION OF IMEG. ©2025 IMEG CONSULTANTS CORP.
North Carolina Design Registration #F-1507

KEY NOTES

205 WOOD 2x10 JOISTS AT 16" OC, TYP AT EXTERIOR DECK

FRAMING PLAN NOTES

A. REFERENCE FOUNDATION PLAN AND ARCHITECTURAL DRAWINGS FOR DIMENSIONS NOT SHOWN.

B. TOP OF FINISHED FLOOR ELEVATION MUST BE AS NOTED ON SLAB PLANS.

C. COMPOSITE STEEL BEAM FRAMING MUST BE EQUALLY SPACED BETWEEN POINTS OF KNOWN DIMENSIONS (NOT TO EXCEED 8'-0" ON-CENTER).

D. CONCRETE ON ELEVATED METAL DECKS MUST BE POURED TO THE THICKNESS INDICATED.

E. AT STEEL ROOF FRAMING, BOTTOM OF DECK ELEVATIONS ARE SHOWN ON PLAN. INTERMEDIATE ELEVATIONS MUST BE STRAIGHT LINES BETWEEN GIVEN ELEVATIONS. INTERPOLATE AS REQUIRED FOR INTERMEDIATE BEARING ELEVATIONS, UNLESS OTHERWISE NOTED.

F. COORDINATE AND VERIFY ALL MEMBER LOCATIONS, DIMENSIONS, WEIGHTS, OPENING SIZES, AND CURB DIMENSIONS FOR ALL MECHANICAL EQUIPMENT WITH THE ACTUAL EQUIPMENT FURNISHED. INCLUDE THIS INFORMATION ON THE JOIST AND STRUCTURAL STEEL SHOP DRAWINGS.

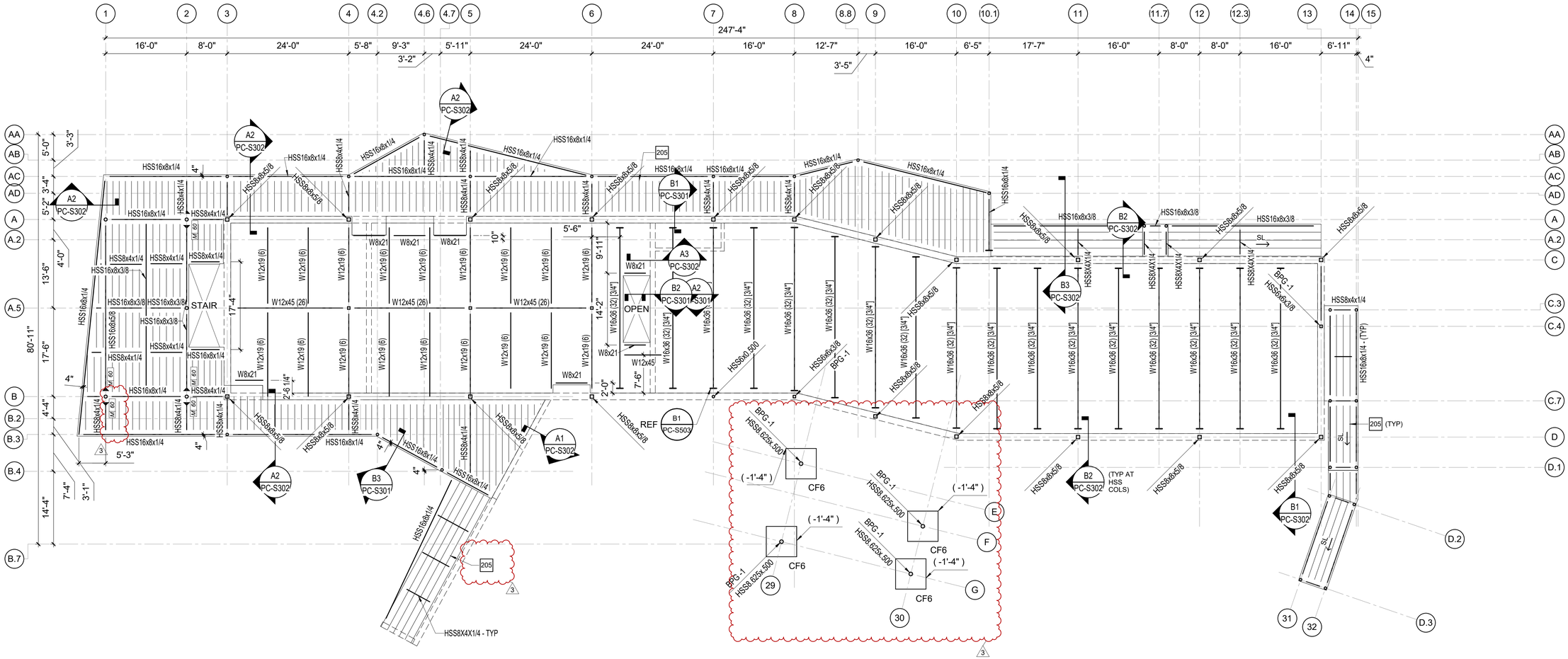

A1 PARK CENTER - FIRST FLOOR FRAMING PLAN
1" = 10'-0"

Susan Hatchell
Landscape Architecture, PLLC
711 W. North Street, Raleigh, NC 27603
p: 919-838-9600 f: 919-838-9700

lynchmykins now IMEG
301 N WEST STREET, SUITE 105
RALEIGH, NC 27603
919.782.1833 www.imegcorp.com

PARK CENTER FIRST FLOOR FRAMING PLAN

LAKE MYRA COUNTY PARK
Wake County, NC

REVISIONS

9/29/2026	ADDENDUM #3

Date: 7/27/26

PC-S103

lynchmykins now IMEG
301 N WEST STREET, SUITE 105
RALEIGH, NC 27603
919.782.1833 www.imegcorp.com

IMEG RESERVES PROPRIETARY RIGHTS, INCLUDING COPYRIGHTS. TO THIS DRAWING AND THE DATA SHOWN THEREON. SAID DRAWING AND/OR DATA ARE THE EXCLUSIVE PROPERTY OF IMEG AND SHALL NOT BE USED OR REPRODUCED FOR ANY OTHER PROJECT WITHOUT THE EXPRESS WRITTEN APPROVAL AND PARTICIPATION OF IMEG. ©2025 IMEG CONSULTANTS CORP.
North Carolina Design Registration #F-1507

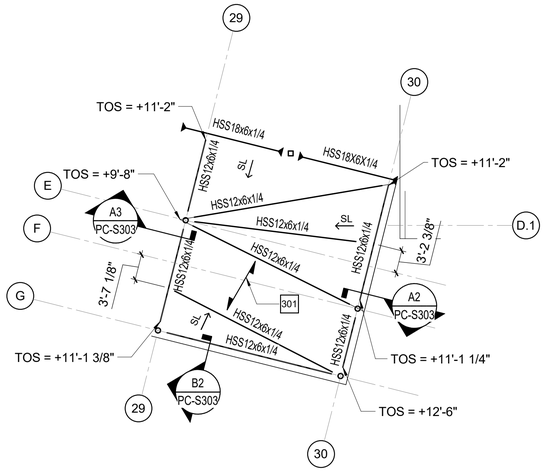

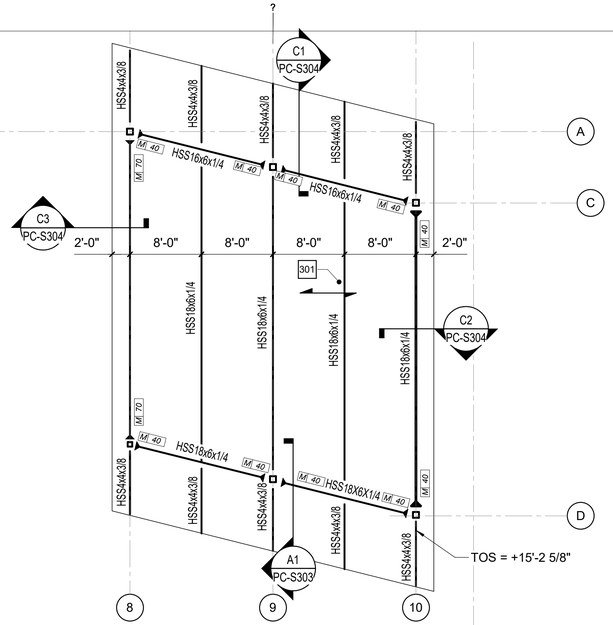

A2 CANOPY FRAMING PLAN

1" = 10'-0"

A3 PARK CENTER UPPER ROOF FRAMING PLAN

1/8" = 1'-0"

KEY NOTES

204	SELF-SUPPORTING OPERABLE PARTITIONS - REFER TO ARCHITECTURAL DRAWINGS.
301	2x6 TONGUE AND GROOVE WOOD DECKING WITH 9/16" PLYWOOD.

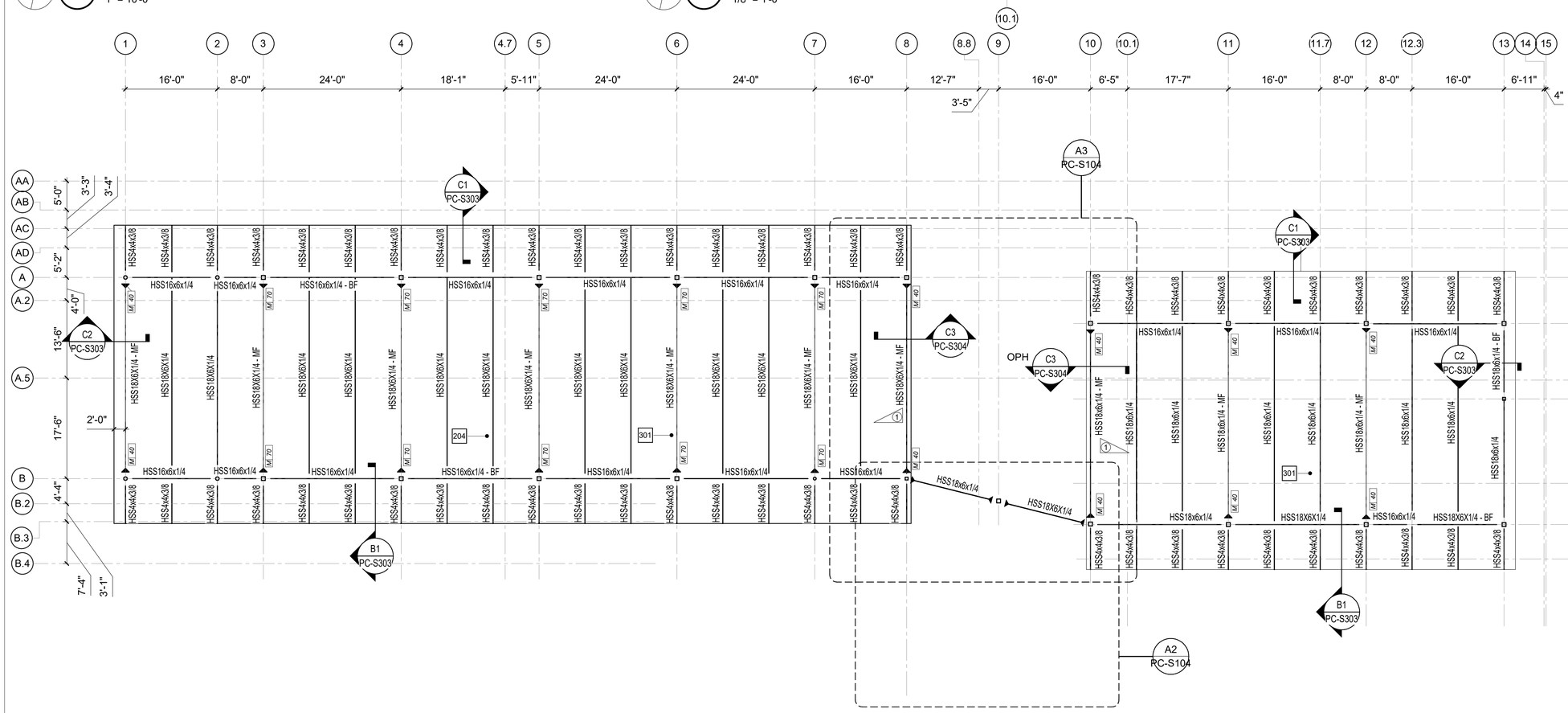

A1 PARK CENTER - ROOF FRAMING PLAN

1" = 10'-0"

Susan Hatchell
Landscape Architecture, PLLC
711 W. North Street, Raleigh, NC 27603
p: 919-838-9600 f: 919-838-9700

lynchmykins now IMEG
301 N WEST STREET, SUITE 105
RALEIGH, NC 27603
919.782.1833 www.imegcorp.com

PARK CENTER ROOF FRAMING PLAN

LAKE MYRA COUNTY PARK
Wake County, NC

REVISIONS

9/29/2026	ADDENDUM #3

lynchmykins now IMEG
301 N WEST STREET, SUITE 105
RALEIGH, NC 27603
919.782.1833 www.imegcorp.com

IMEG RESERVES PROPRIETARY RIGHTS, INCLUDING COPYRIGHTS, TO THIS DRAWING AND THE DATA SHOWN THEREON. SAID DRAWING AND/OR DATA ARE THE EXCLUSIVE PROPERTY OF IMEG AND SHALL NOT BE USED OR REPRODUCED FOR ANY OTHER PROJECT WITHOUT THE EXPRESS WRITTEN APPROVAL AND PARTICIPATION OF IMEG.
©2025 IMEG CONSULTANTS CORP.
North Carolina Design Registration #F-1509

Date: 7/27/26

PC-S104

3

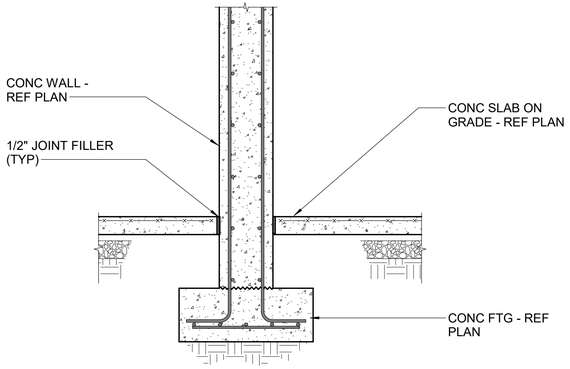

C1 SECTION
3/4" = 1'-0"

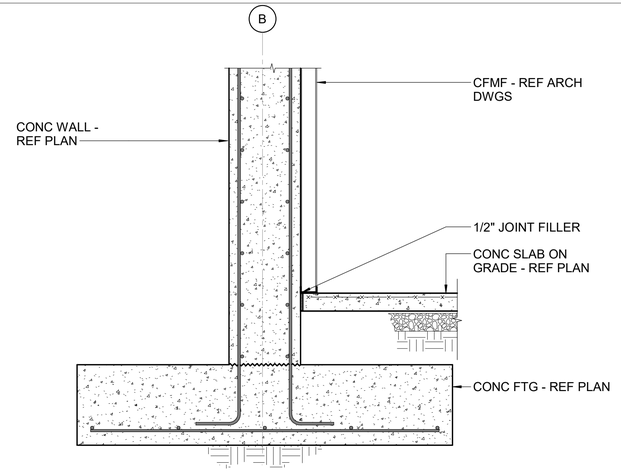

C2 SECTION
3/4" = 1'-0"

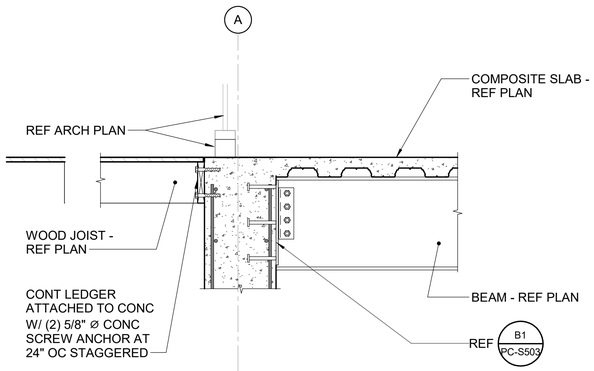

B1 SECTION
3/4" = 1'-0"

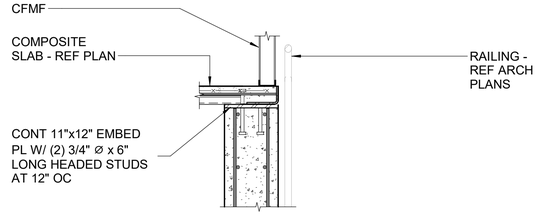

B2 SECTION
3/4" = 1'-0"

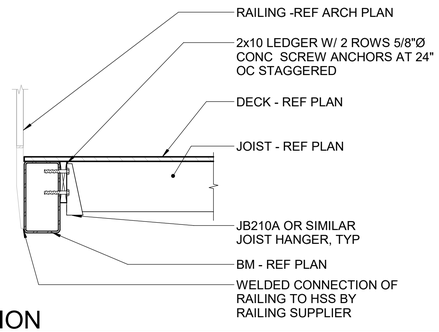

B3 SECTION
3/4" = 1'-0"

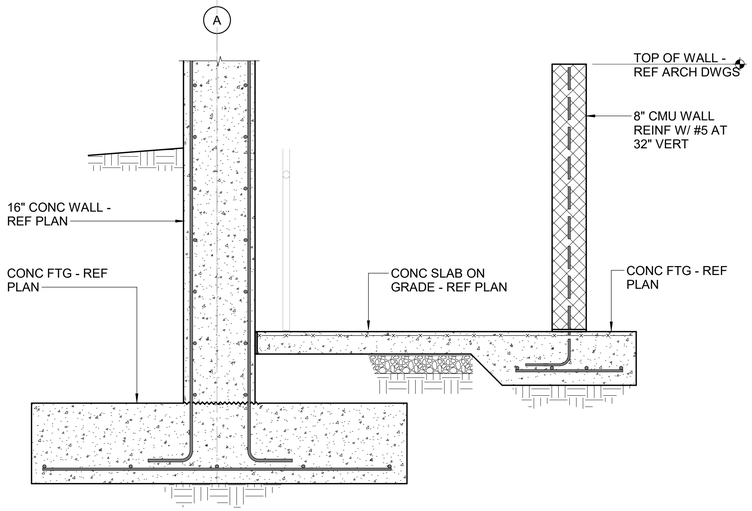

A1 SECTION
3/4" = 1'-0"

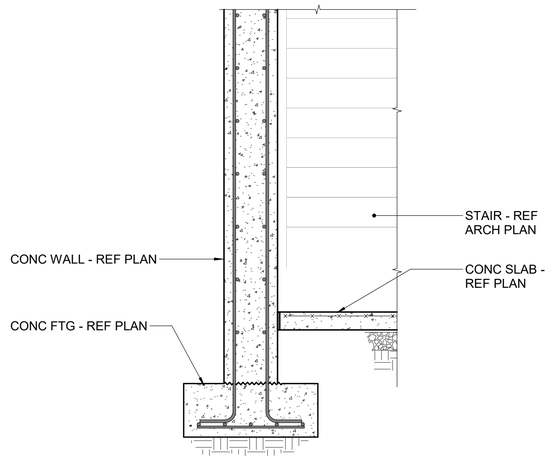

A2 SECTION
3/4" = 1'-0"

Susan Hatchell
Landscape Architecture, PLLC
711 W. North Street, Raleigh, NC 27603
p: 919-838-9600 f: 919-838-9700

lynchmykins now IMEG
301 N WEST STREET, SUITE 105
RALEIGH, NC 27603
919.782.1833 www.imegcorp.com

SECTIONS

LAKE MYRA COUNTY PARK
Wake County, NC

REVISIONS

9/29/2026	ADDENDUM #3

lynchmykins now IMEG
301 N WEST STREET, SUITE 105
RALEIGH, NC 27603
919.782.1833 www.imegcorp.com

IMEG RESERVES PROPRIETARY RIGHTS, INCLUDING COPYRIGHTS. TO THIS DRAWING AND THE DATA SHOWN THEREON. SAID DRAWING AND/OR DATA ARE THE EXCLUSIVE PROPERTY OF IMEG AND SHALL NOT BE USED OR REPRODUCED FOR ANY OTHER PROJECT WITHOUT THE EXPRESS WRITTEN APPROVAL AND PARTICIPATION OF IMEG.
©2025 IMEG CONSULTANTS CORP.
North Carolina Design Registration #F-1507

Date: 7/27/26

PC-S301

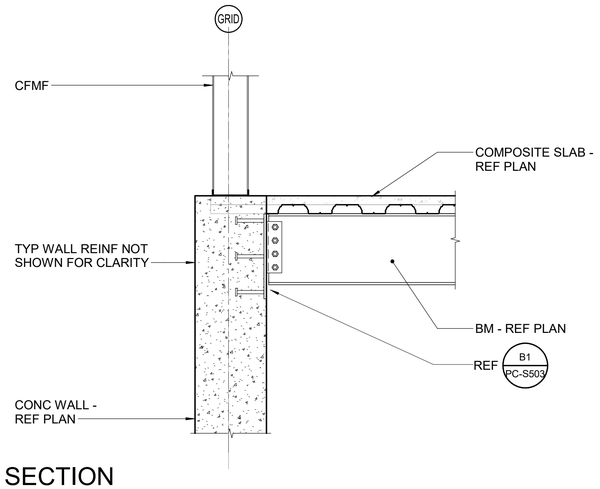

B1 SECTION
3/4" = 1'-0"

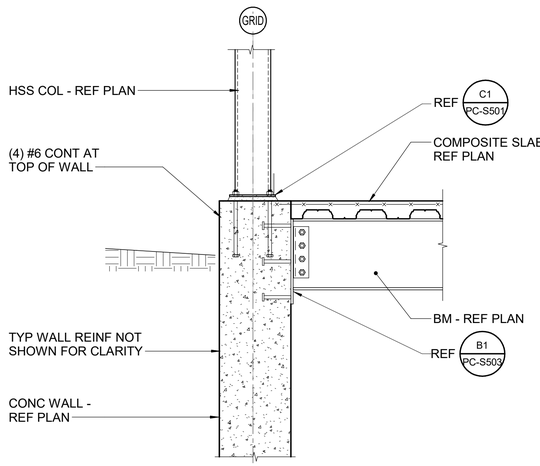

B2 SECTION
3/4" = 1'-0"

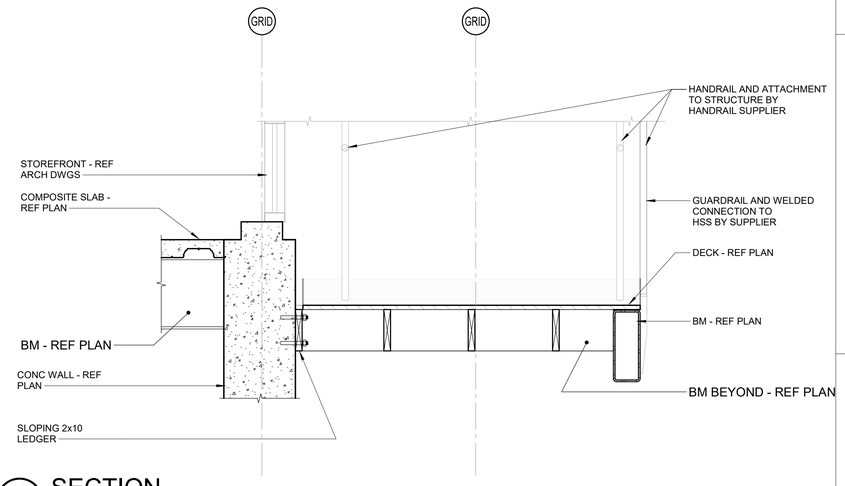

B3 SECTION
3/4" = 1'-0"

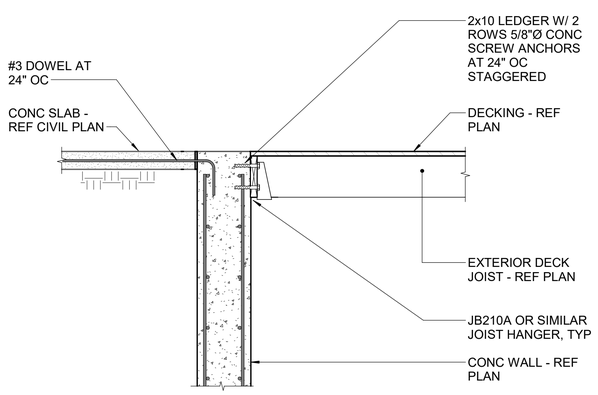

A1 SECTION
3/4" = 1'-0"

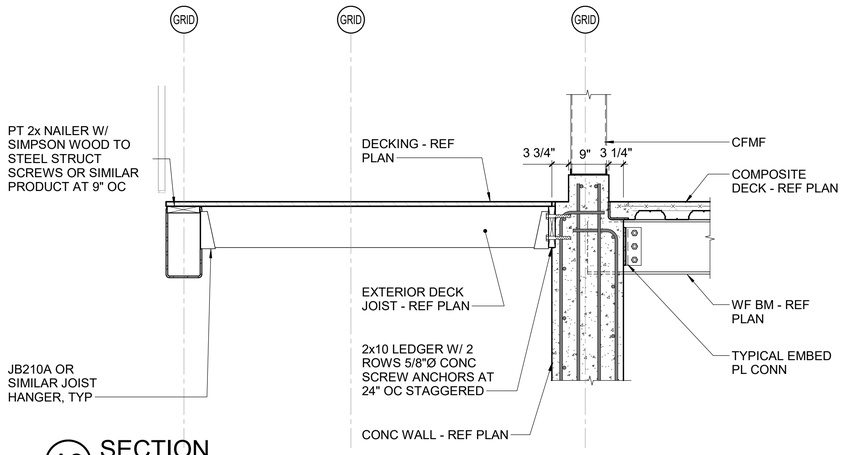

A2 SECTION
3/4" = 1'-0"

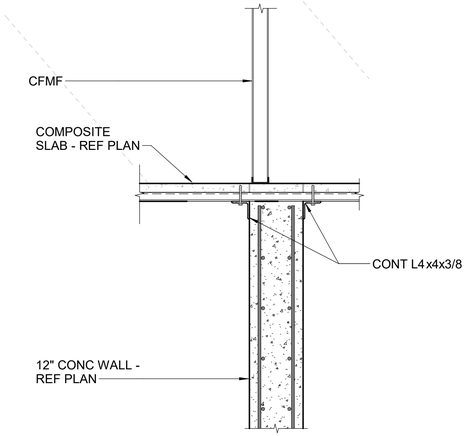

A3 SECTION
3/4" = 1'-0"

Susan Hatchell
Landscape Architecture, PLLC
711 W. North Street, Raleigh, NC 27603
p: 919-838-9600 f: 919-838-9700

lynchmykins now IMEG
301 N WEST STREET, SUITE 105
RALEIGH, NC 27603
919.782.1833 www.imegcorp.com

SECTIONS

LAKE MYRA COUNTY PARK
Wake County, NC

REVISIONS

9/29/2026	ADDENDUM #3

lynchmykins now IMEG
301 N WEST STREET, SUITE 105
RALEIGH, NC 27603
919.782.1833 www.imegcorp.com

IMEG RESERVES PROPRIETARY RIGHTS, INCLUDING COPYRIGHTS, TO THIS DRAWING AND THE DATA SHOWN THEREON. SAID DRAWING AND/OR DATA ARE THE EXCLUSIVE PROPERTY OF IMEG AND SHALL NOT BE USED OR REPRODUCED FOR ANY OTHER PROJECT WITHOUT THE EXPRESS WRITTEN APPROVAL AND PARTICIPATION OF IMEG.
©2025 IMEG CONSULTANTS CORP.
North Carolina Design Registration #F-1507

Date: 7/27/26

PC-S302

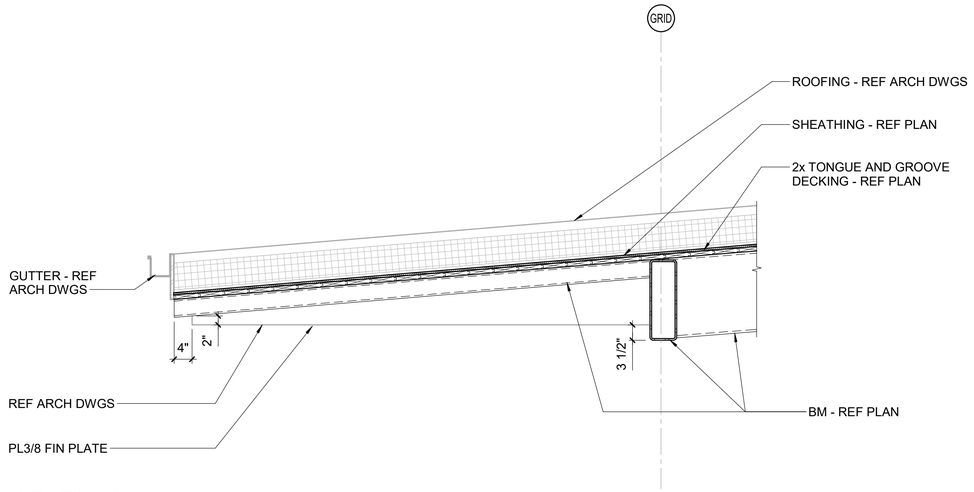

C1 SECTION
3/4" = 1'-0"

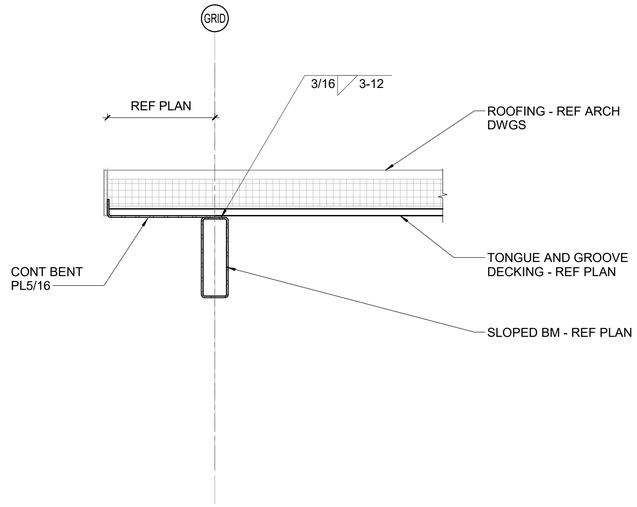

C2 SECTION
3/4" = 1'-0"

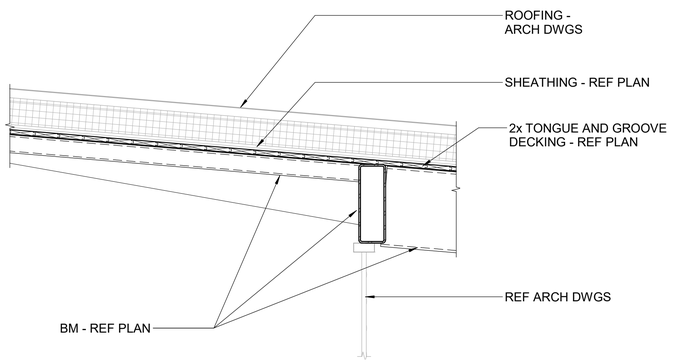

A1 SECTION
3/4" = 1'-0"

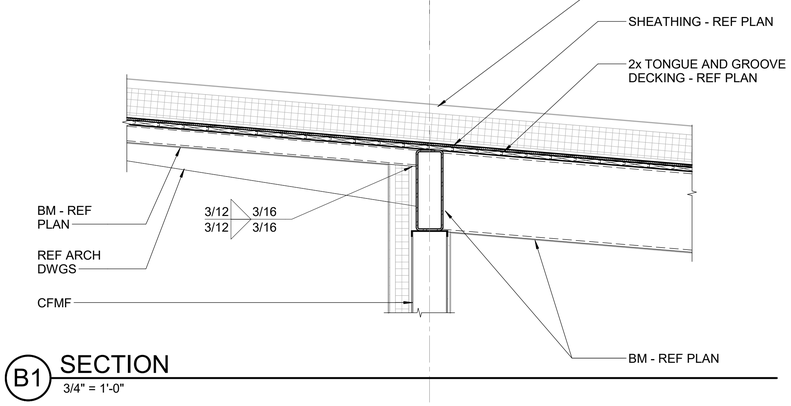

B1 SECTION
3/4" = 1'-0"

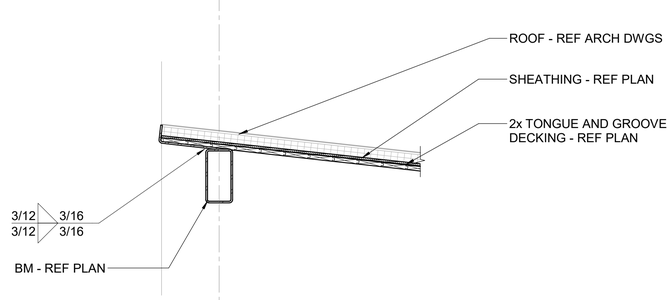

B2 SECTION
3/4" = 1'-0"

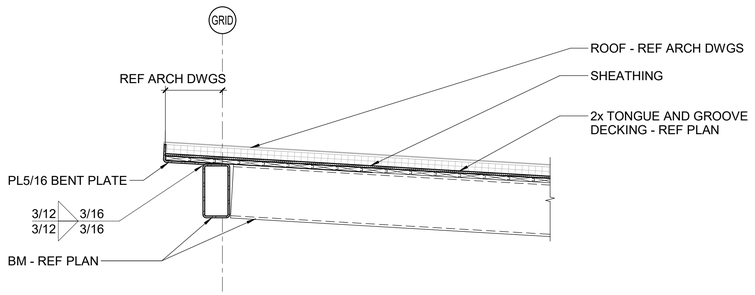

A2 SECTION
3/4" = 1'-0"

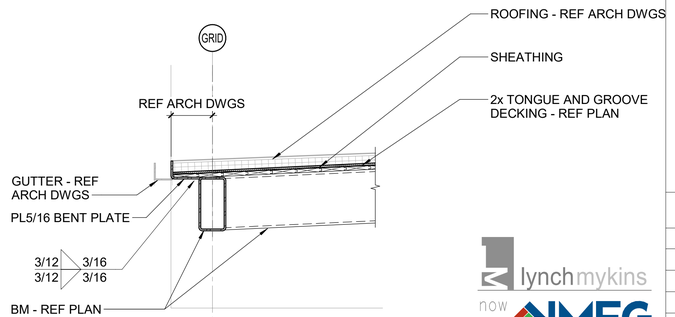

A3 SECTION
3/4" = 1'-0"

Susan Hatchell
Landscape Architecture, PLLC
711 W. North Street, Raleigh, NC 27603
p: 919-838-9600 f: 919-838-9700

lynchmykins now IMEG
301 N WEST STREET, SUITE 105
RALEIGH, NC 27603
919.782.1833 www.imegcorp.com

SECTIONS

LAKE MYRA COUNTY PARK
Wake County, NC

REVISIONS

9/29/2026	ADDENDUM #3

lynchmykins now IMEG
301 N WEST STREET, SUITE 105
RALEIGH, NC 27603
919.782.1833 www.imegcorp.com

IMEG RESERVES PROPRIETARY RIGHTS, INCLUDING COPYRIGHTS, TO THIS DRAWING AND THE DATA SHOWN THEREON. SAID DRAWING AND/OR DATA ARE THE EXCLUSIVE PROPERTY OF IMEG AND SHALL NOT BE USED OR REPRODUCED FOR ANY OTHER PROJECT WITHOUT THE EXPRESS WRITTEN APPROVAL AND PARTICIPATION OF IMEG.
©2025 IMEG CONSULTANTS CORP.
North Carolina Design Registration #F-1509

Date: 7/27/26

PC-S303

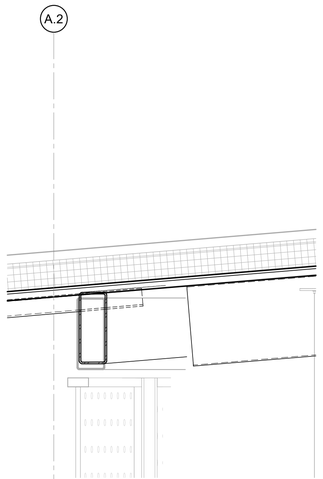

C1 SECTION
3/4" = 1'-0"

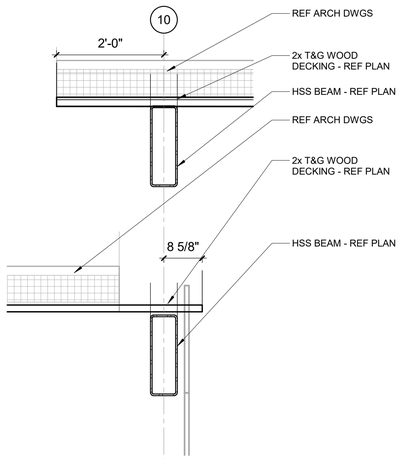

C2 SECTION
3/4" = 1'-0"

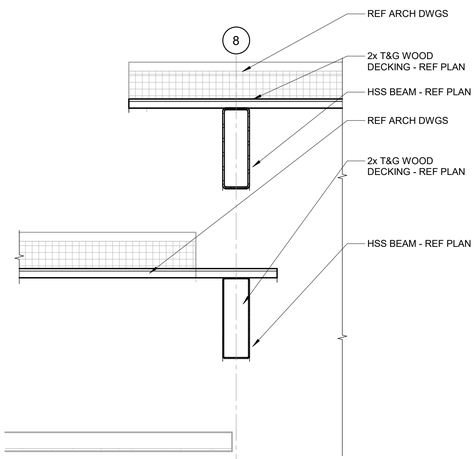

C3 SECTION
3/4" = 1'-0"

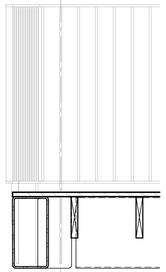

B1 SECTION
3/4" = 1'-0"

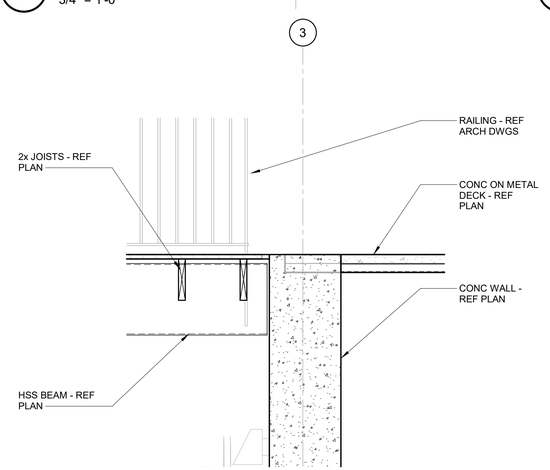

B2 SECTION
3/4" = 1'-0"

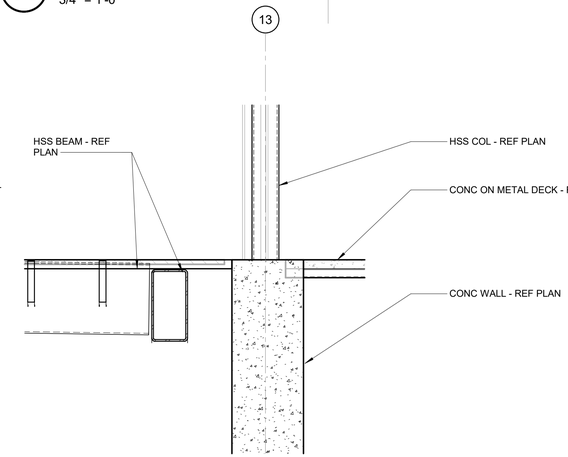

B3 SECTION
3/4" = 1'-0"

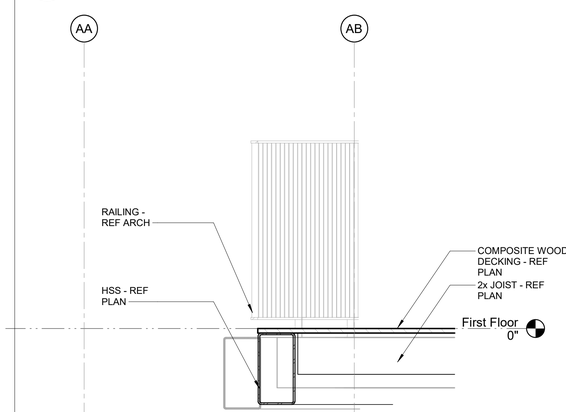

A2 SECTION
3/4" = 1'-0"

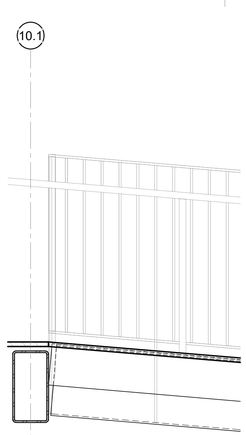

A3 SECTION
3/4" = 1'-0"

Susan Hatchell
Landscape Architecture, PLLC
711 W. North Street, Raleigh, NC 27603
p: 919-838-9600 f: 919-838-9700

lynchmykins now IMEG
301 N WEST STREET, SUITE 105
RALEIGH, NC 27603
919.782.1833 www.imegcorp.com

SECTIONS

LAKE MYRA COUNTY PARK
Wake County, NC

REVISIONS

Date: 7/27/26

PC-S304

lynchmykins now IMEG
301 N WEST STREET, SUITE 105
RALEIGH, NC 27603
919.782.1833 www.imegcorp.com

IMEG RESERVES PROPRIETARY RIGHTS, INCLUDING COPYRIGHTS, TO THIS DRAWING AND THE DATA SHOWN THEREON. SAID DRAWING AND/OR DATA ARE THE EXCLUSIVE PROPERTY OF IMEG AND SHALL NOT BE USED OR REPRODUCED FOR ANY OTHER PROJECT WITHOUT THE EXPRESS WRITTEN APPROVAL AND PARTICIPATION OF IMEG.
©2025 IMEG CONSULTANTS CORP.
North Carolina Design Registration #F-1507

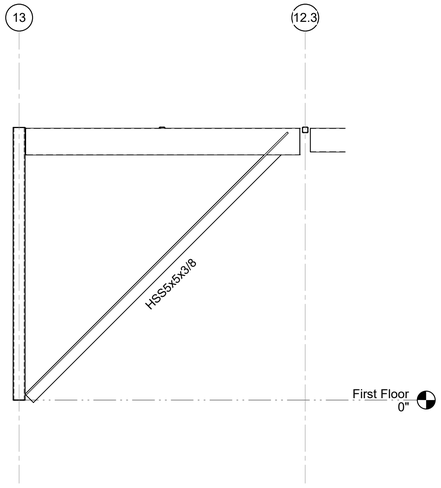

B1 BRACED ELEVATION
1/4" = 1'-0"

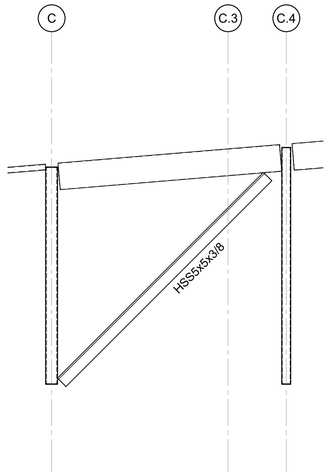

B2 BRACED ELEVATION
1/4" = 1'-0"

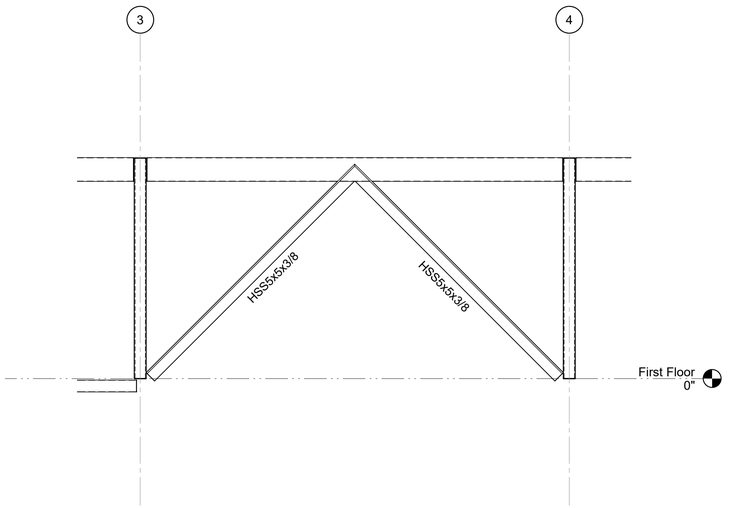

A1 BRACED ELEVATION
1/4" = 1'-0"

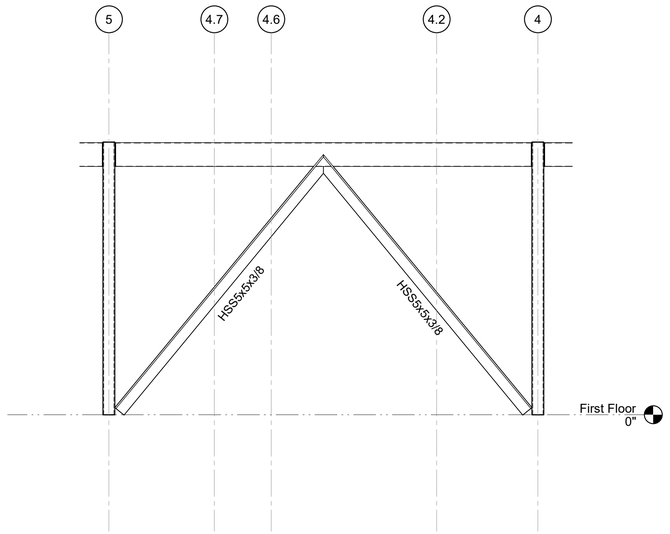

A2 BRACED ELEVATION
1/4" = 1'-0"

Susan Hatchell
Landscape Architecture, PLLC
711 W. North Street, Raleigh, NC 27603
p: 919-838-9600 f: 919-838-9700

lynchmykins now IMEG
301 N WEST STREET, SUITE 105
RALEIGH, NC 27603
919.782.1833 www.imegcorp.com

BRACED ELEVATIONS

LAKE MYRA COUNTY PARK
Wake County, NC

REVISIONS

9/29/2026	ADDENDUM #3

lynchmykins now IMEG
301 N WEST STREET, SUITE 105
RALEIGH, NC 27603
919.782.1833 www.imegcorp.com

IMEG RESERVES PROPRIETARY RIGHTS, INCLUDING COPYRIGHTS. TO THIS DRAWING AND THE DATA SHOWN THEREON. SAID DRAWING AND/OR DATA ARE THE EXCLUSIVE PROPERTY OF IMEG AND SHALL NOT BE USED OR REPRODUCED FOR ANY OTHER PROJECT WITHOUT THE EXPRESS WRITTEN APPROVAL AND PARTICIPATION OF IMEG.
©2025 IMEG CONSULTANTS CORP.
North Carolina Design Registration #F-1507

Date: 7/27/26

PC-S400

FRAMING PLAN NOTES

A. REFERENCE FOUNDATION PLAN AND ARCHITECTURAL DRAWINGS FOR DIMENSIONS NOT SHOWN.

B. TOP OF FINISHED FLOOR ELEVATION MUST BE AS NOTED ON SLAB PLANS.

C. COMPOSITE STEEL BEAM FRAMING MUST BE EQUALLY SPACED BETWEEN POINTS OF KNOWN DIMENSIONS (NOT TO EXCEED 10'-0" ON-CENTER).

D. CONCRETE ON ELEVATED METAL DECKS MUST BE POURED TO THE THICKNESS INDICATED.

E. AT STEEL ROOF FRAMING, BOTTOM OF DECK ELEVATIONS ARE SHOWN ON PLAN. INTERMEDIATE ELEVATIONS MUST BE STRAIGHT LINES BETWEEN GIVEN ELEVATIONS. INTERPOLATE AS REQUIRED FOR INTERMEDIATE BEARING ELEVATIONS, UNLESS OTHERWISE NOTED.

F. COORDINATE AND VERIFY ALL MEMBER LOCATIONS, DIMENSIONS, WEIGHTS, OPENING SIZES, AND CURB DIMENSIONS FOR ALL MECHANICAL EQUIPMENT WITH THE ACTUAL EQUIPMENT FURNISHED. INCLUDE THIS INFORMATION ON THE JOIST AND STRUCTURAL STEEL SHOP DRAWINGS.

KEY NOTES

301 2x6 TONGUE AND GROOVE WOOD DECKING WITH 9/16" PLYWOOD.

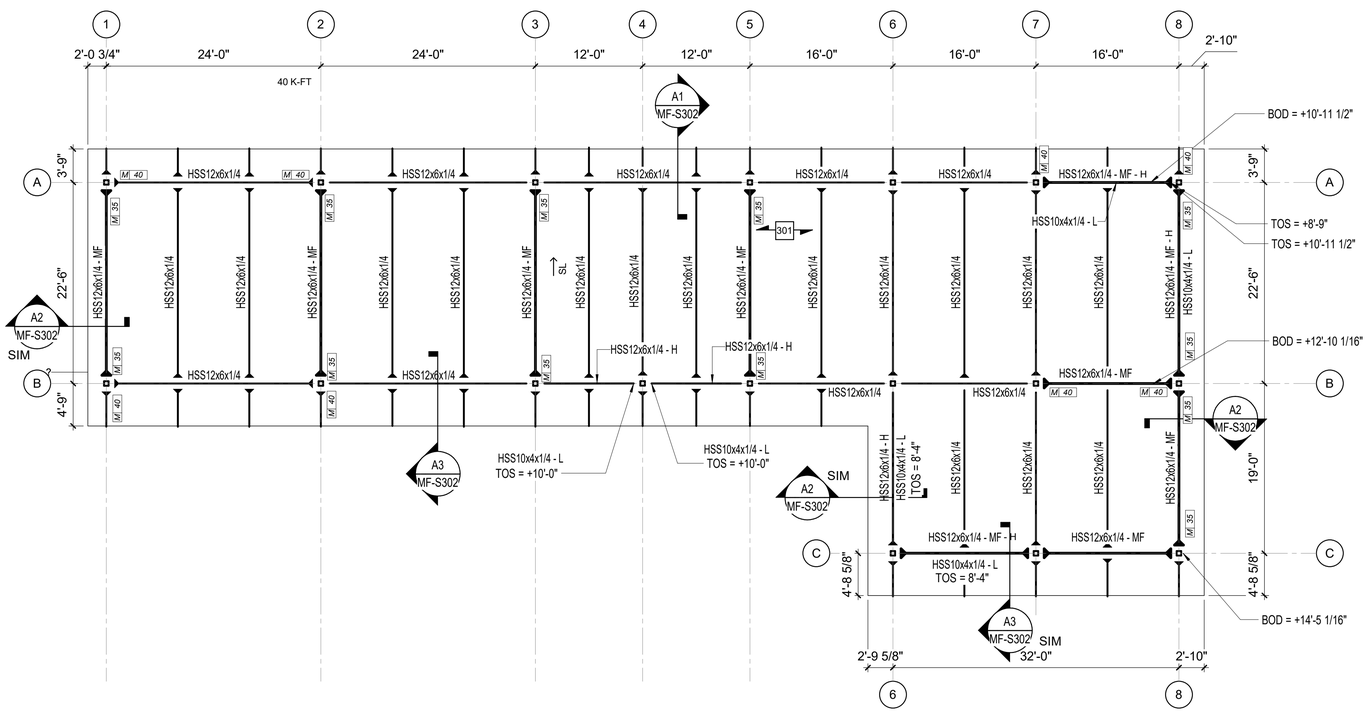

A1 MAINTENANCE FACILITY ROOF FRAMING PLAN

1/8" = 1'-0"

Susan Hatchell
Landscape Architecture, PLLC
711 W. North Street, Raleigh, NC 27603
p: 919-838-9600 f: 919-838-9700

lynchmykins now IMEG
301 N WEST STREET, SUITE 105
RALEIGH, NC 27603
919.782.1833 www.imegcorp.com

MAINTENANCE FACILITY ROOF FRAMING PLAN

LAKE MYRA COUNTY PARK
Wake County, NC

REVISIONS

9/29/2026	ADDENDUM #3

lynchmykins now IMEG
301 N WEST STREET, SUITE 105
RALEIGH, NC 27603
919.782.1833 www.imegcorp.com

IMEG RESERVES PROPRIETARY RIGHTS, INCLUDING COPYRIGHTS, TO THIS DRAWING AND THE DATA SHOWN THEREON. SAID DRAWING AND/OR DATA ARE THE EXCLUSIVE PROPERTY OF IMEG AND SHALL NOT BE USED OR REPRODUCED FOR ANY OTHER PROJECT WITHOUT THE EXPRESS WRITTEN APPROVAL AND PARTICIPATION OF IMEG.
©2025 IMEG CONSULTANTS CORP.
North Carolina Design Registration #F-1507

Date: 7/27/26

MF-S102

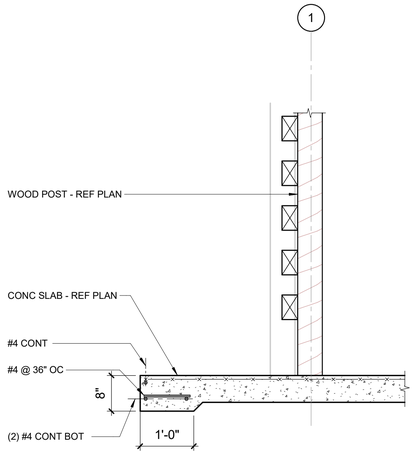

B1 SECTION
3/4" = 1'-0"

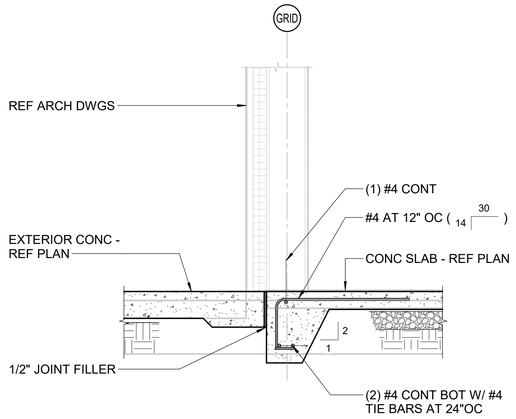

B2 SECTION
3/4" = 1'-0"

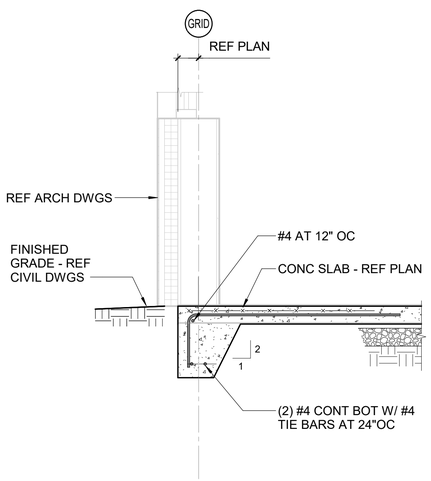

A1 SECTION AT SLAB EDGE
3/4" = 1'-0"

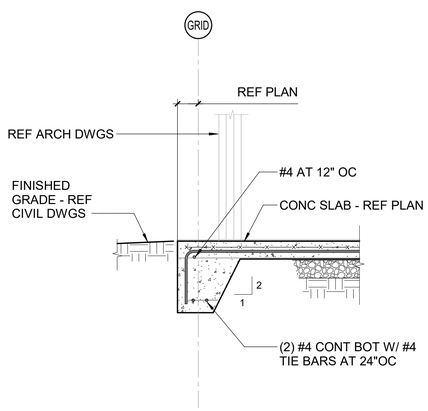

FOR DETAILS
NOT NOTED REF
A1 / MF-S301

A2 SECTION AT SLAB EDGE
3/4" = 1'-0"

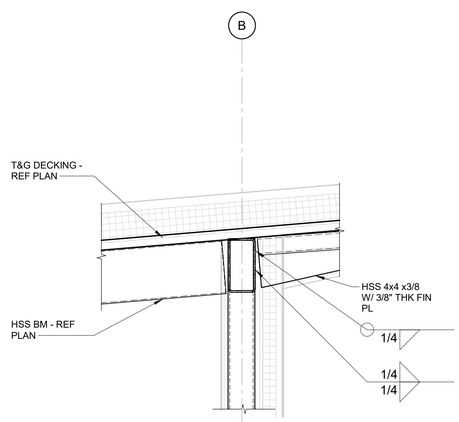

A3 CONNECTION DETAIL
3/4" = 1'-0"

Susan Hatchell
Landscape Architecture, PLLC
711 W. North Street, Raleigh, NC 27603
p: 919-838-9600 f: 919-838-9700

lynchmykins now IMEG
301 N WEST STREET, SUITE 105
RALEIGH, NC 27603
919.782.1833 www.imegcorp.com

SECTIONS

LAKE MYRA COUNTY PARK
Wake County, NC

REVISIONS

9/29/2026	ADDENDUM #3

lynchmykins now IMEG
301 N WEST STREET, SUITE 105
RALEIGH, NC 27603
919.782.1833 www.imegcorp.com

IMEG RESERVES PROPRIETARY RIGHTS, INCLUDING COPYRIGHTS, TO THIS DRAWING AND THE DATA SHOWN THEREON. SAID DRAWING AND/OR DATA ARE THE EXCLUSIVE PROPERTY OF IMEG AND SHALL NOT BE USED OR REPRODUCED FOR ANY OTHER PROJECT WITHOUT THE EXPRESS WRITTEN APPROVAL AND PARTICIPATION OF IMEG. ©2025 IMEG CONSULTANTS CORP.
North Carolina Design Registration #F-1507

Date: 7/27/26

MF-S301

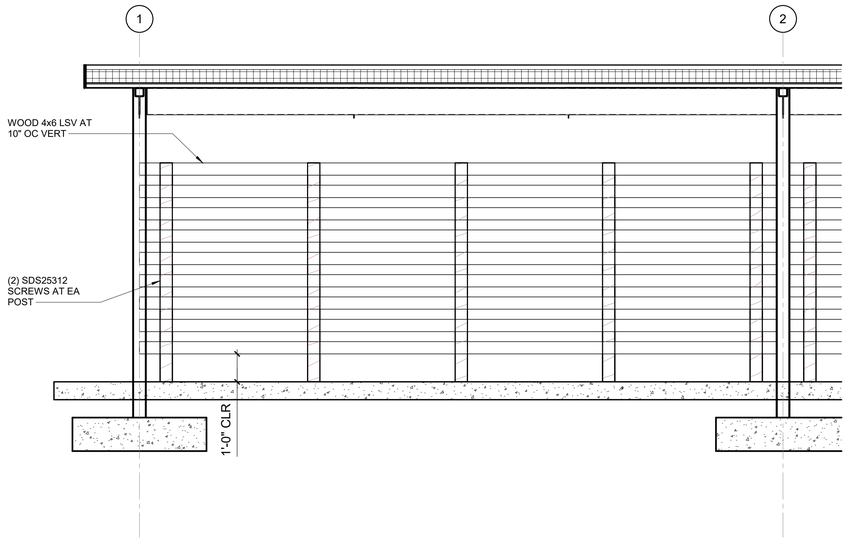

B1 SCREENWALL ELEVATION
3/8" = 1'-0"

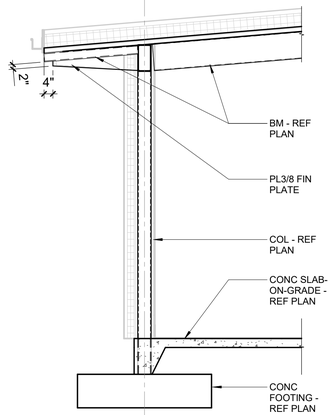

A1 SECTION
3/8" = 1'-0"

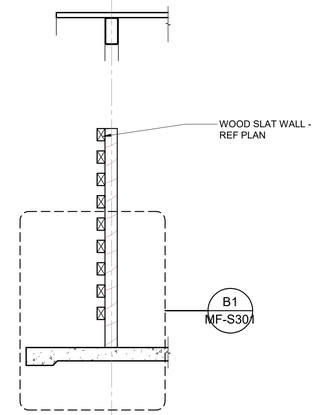

A2 SECTION
3/8" = 1'-0"

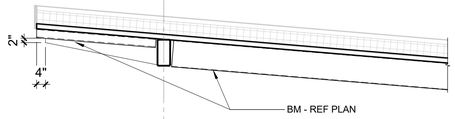

A3 SECTION
3/8" = 1'-0"

Susan Hatchell
Landscape Architecture, PLLC
711 W. North Street, Raleigh, NC 27603
p: 919-838-9600 f: 919-838-9700

lynchmykins now IMEG
301 N WEST STREET, SUITE 105
RALEIGH, NC 27603
919.782.1833 www.imegcorp.com

SECTIONS

LAKE MYRA COUNTY PARK
Wake County, NC

REVISIONS

9/29/2026	ADDENDUM #3

lynchmykins now IMEG
301 N WEST STREET, SUITE 105
RALEIGH, NC 27603
919.782.1833 www.imegcorp.com

IMEG RESERVES PROPRIETARY RIGHTS, INCLUDING COPYRIGHTS, TO THIS DRAWING AND THE DATA SHOWN THEREON. SAID DRAWING AND/OR DATA ARE THE EXCLUSIVE PROPERTY OF IMEG AND SHALL NOT BE USED OR REPRODUCED FOR ANY OTHER PROJECT WITHOUT THE EXPRESS WRITTEN APPROVAL AND PARTICIPATION OF IMEG.
©2025 IMEG CONSULTANTS CORP.
North Carolina Design Registration #F-1507

Date: 7/27/26

MF-S302

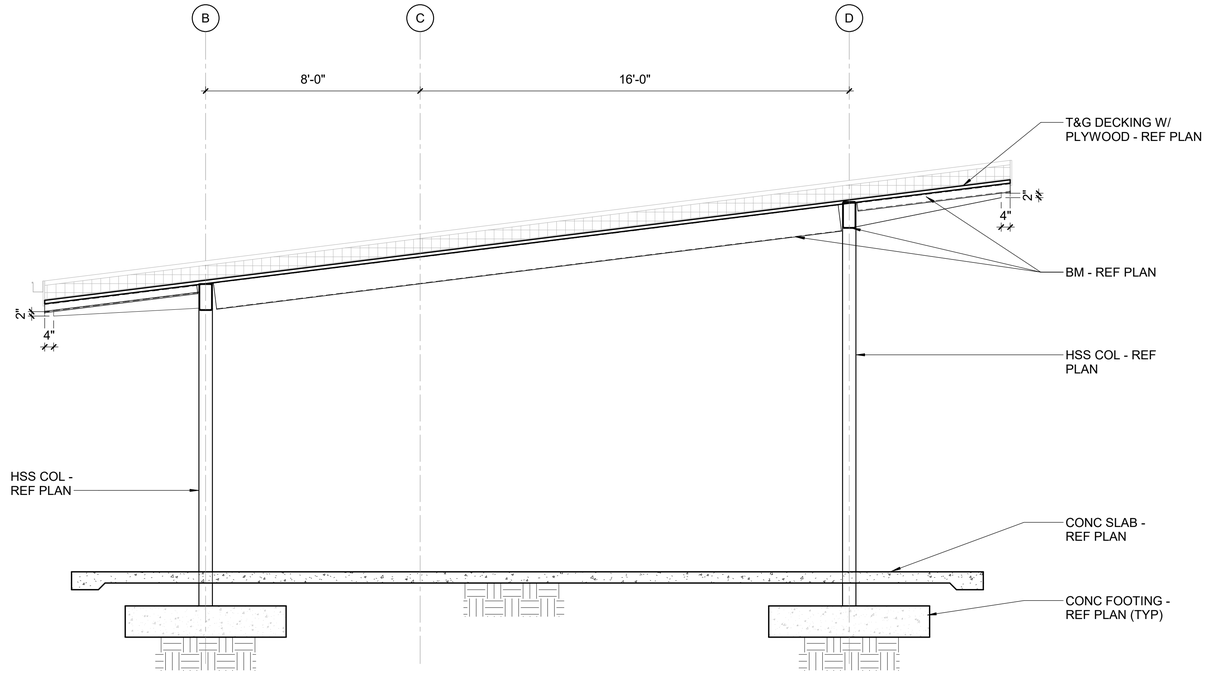

A2 SECTION
3/8" = 1'-0"

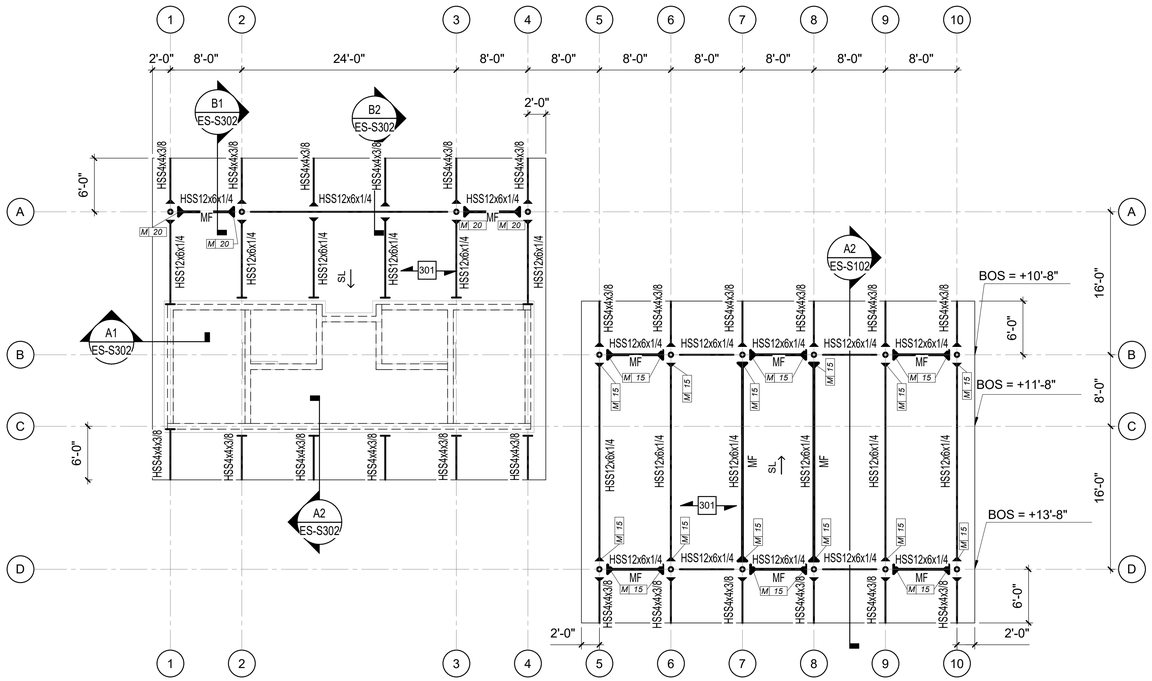

A1 SHELTER BLDG A ROOF PLAN
1/8" = 1'-0"

FRAMING PLAN NOTES

A. REFERENCE FOUNDATION PLAN AND ARCHITECTURAL DRAWINGS FOR DIMENSIONS NOT SHOWN.

B. TOP OF FINISHED FLOOR ELEVATION MUST BE AS NOTED ON SLAB PLANS.

C. COMPOSITE STEEL BEAM FRAMING MUST BE EQUALLY SPACED BETWEEN POINTS OF KNOWN DIMENSIONS (NOT TO EXCEED [10'-0"] ON-CENTER).

D. CONCRETE ON ELEVATED METAL DECKS MUST BE POURED TO THE THICKNESS INDICATED.

E. AT STEEL ROOF FRAMING, BOTTOM OF DECK ELEVATIONS ARE SHOWN ON PLAN. INTERMEDIATE ELEVATIONS MUST BE STRAIGHT LINES BETWEEN GIVEN ELEVATIONS. INTERPOLATE AS REQUIRED FOR INTERMEDIATE BEARING ELEVATIONS, UNLESS OTHERWISE NOTED.

F. COORDINATE AND VERIFY ALL MEMBER LOCATIONS, DIMENSIONS, WEIGHTS, OPENING SIZES, AND CURB DIMENSIONS FOR ALL MECHANICAL EQUIPMENT WITH THE ACTUAL EQUIPMENT FURNISHED. INCLUDE THIS INFORMATION ON THE JOIST AND STRUCTURAL STEEL SHOP DRAWINGS.

KEY NOTES

301 2x6 TONGUE AND GROOVE WOOD DECKING WITH 9/16" PLYWOOD.

Susan Hatchell
Landscape Architecture, PLLC
711 W. North Street, Raleigh, NC 27603
p: 919-838-9600 f: 919-838-9700

lynchmykins now IMEG
301 N WEST STREET, SUITE 105
RALEIGH, NC 27603
919.782.1833 www.imegcorp.com

SHELTER A AND B ROOF FRAMING PLAN

LAKE MYRA COUNTY PARK
Wake County, NC

REVISIONS

9/29/2026	ADDENDUM #3

lynchmykins now IMEG
301 N WEST STREET, SUITE 105
RALEIGH, NC 27603
919.782.1833 www.imegcorp.com

IMEG RESERVES PROPRIETARY RIGHTS, INCLUDING COPYRIGHTS, TO THIS DRAWING AND THE DATA SHOWN THEREON. SAID DRAWING AND/OR DATA ARE THE EXCLUSIVE PROPERTY OF IMEG AND SHALL NOT BE USED OR REPRODUCED FOR ANY OTHER PROJECT WITHOUT THE EXPRESS WRITTEN APPROVAL AND PARTICIPATION OF IMEG.
©2025 IMEG CONSULTANTS CORP.
North Carolina Design Registration #F-1507

Date: 7/27/26

ES-S102

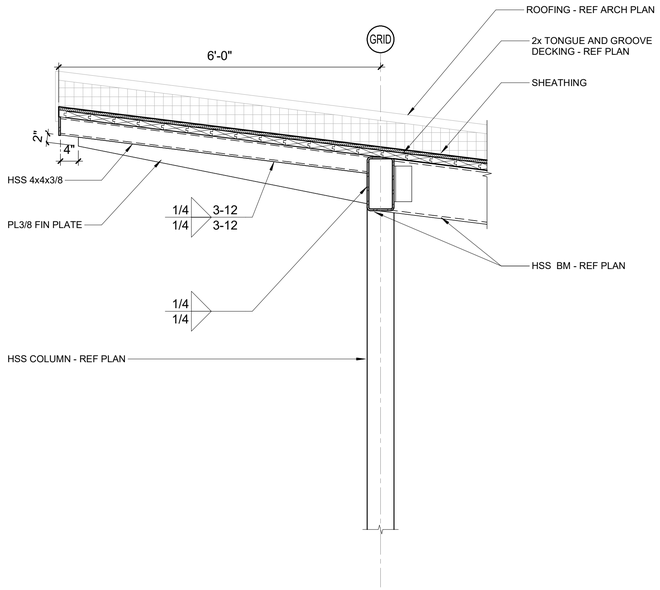

B1 SECTION
3/4" = 1'-0"

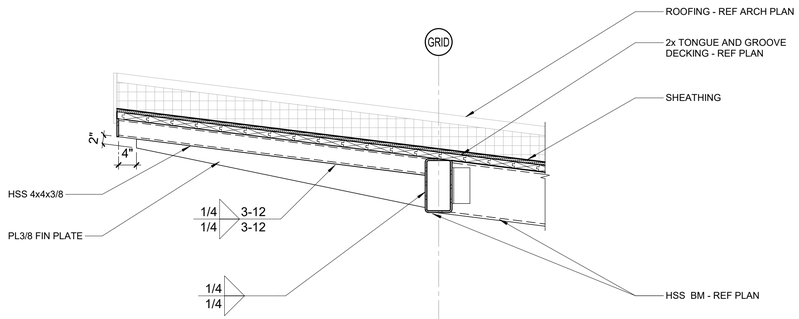

B2 SECTION
3/4" = 1'-0"

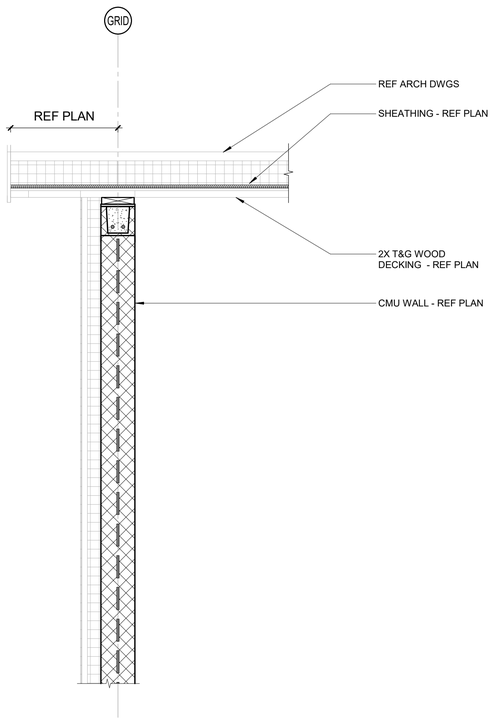

A1 SECTION
3/4" = 1'-0"

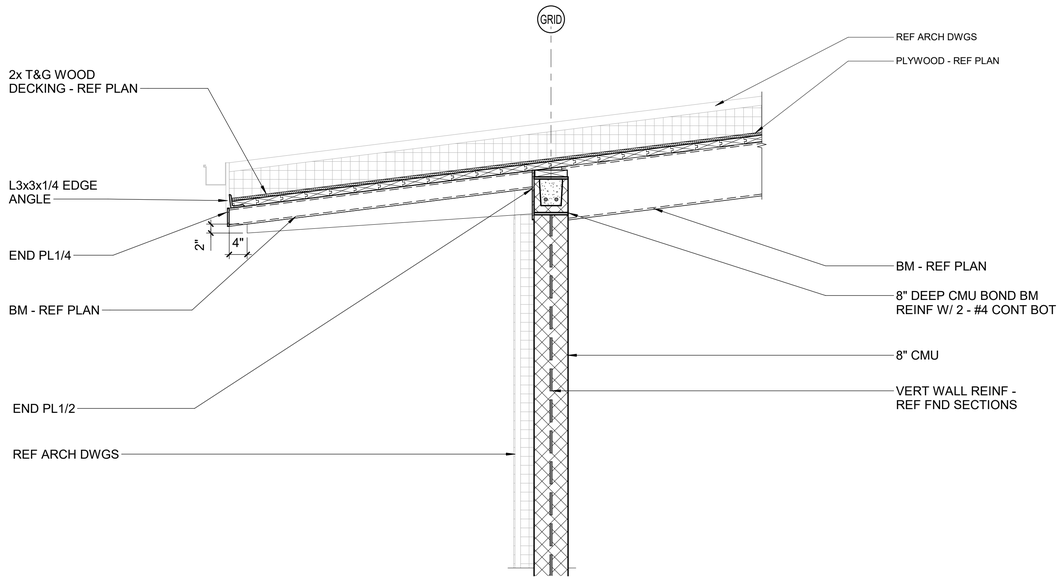

A2 SECTION
3/4" = 1'-0"

Susan Hatchell
Landscape Architecture, PLLC
711 W. North Street, Raleigh, NC 27603
p: 919-838-9600 f: 919-838-9700

lynchmykins now IMEG
301 N WEST STREET, SUITE 105
RALEIGH, NC 27603
919.782.1833 www.imegcorp.com

SECTIONS

LAKE MYRA COUNTY PARK
Wake County, NC

REVISIONS

9/29/2026	ADDENDUM #3

lynchmykins now IMEG
301 N WEST STREET, SUITE 105
RALEIGH, NC 27603
919.782.1833 www.imegcorp.com

IMEG RESERVES PROPRIETARY RIGHTS, INCLUDING COPYRIGHTS, TO THIS DRAWING AND THE DATA SHOWN THEREON. SAID DRAWING AND/OR DATA ARE THE EXCLUSIVE PROPERTY OF IMEG AND SHALL NOT BE USED OR REPRODUCED FOR ANY OTHER PROJECT WITHOUT THE EXPRESS WRITTEN APPROVAL AND PARTICIPATION OF IMEG. ©2025 IMEG CONSULTANTS CORP.
North Carolina Design Registration #F-1507

Date: 7/27/26

ES-S302

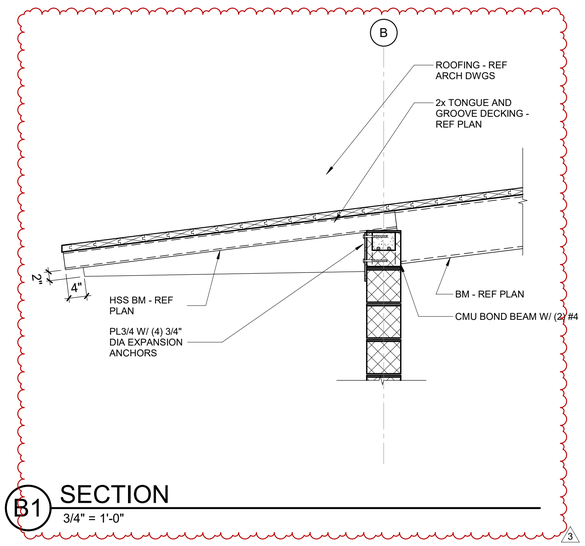

B1 SECTION

3/4" = 1'-0"

KEY NOTES

301 2x6 TONGUE AND GROOVE WOOD DECKING WITH 9/16" PLYWOOD.

FRAMING PLAN NOTES

A. REFERENCE FOUNDATION PLAN AND ARCHITECTURAL DRAWINGS FOR DIMENSIONS NOT SHOWN.

B. TOP OF FINISHED FLOOR ELEVATION MUST BE AS NOTED ON SLAB PLANS.

C. COMPOSITE STEEL BEAM FRAMING MUST BE EQUALLY SPACED BETWEEN POINTS OF KNOWN DIMENSIONS (NOT TO EXCEED [10'-0"] ON-CENTER).

D. CONCRETE ON ELEVATED METAL DECKS MUST BE POURED TO THE THICKNESS INDICATED.

E. AT STEEL ROOF FRAMING, BOTTOM OF DECK ELEVATIONS ARE SHOWN ON PLAN. INTERMEDIATE ELEVATIONS MUST BE STRAIGHT LINES BETWEEN GIVEN ELEVATIONS. INTERPOLATE AS REQUIRED FOR INTERMEDIATE BEARING ELEVATIONS, UNLESS OTHERWISE NOTED.

F. COORDINATE AND VERIFY ALL MEMBER LOCATIONS, DIMENSIONS, WEIGHTS, OPENING SIZES, AND CURB DIMENSIONS FOR ALL MECHANICAL EQUIPMENT WITH THE ACTUAL EQUIPMENT FURNISHED. INCLUDE THIS INFORMATION ON THE JOIST AND STRUCTURAL STEEL SHOP DRAWINGS.

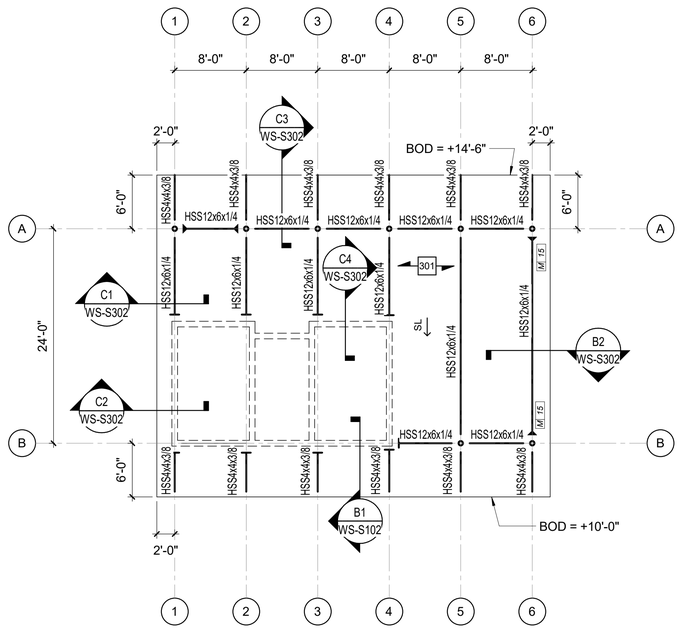

A1 WESTERN SHELTER ROOF FRAMING PLAN

1/8" = 1'-0"

Susan Hatchell
Landscape Architecture, PLLC
711 W. North Street, Raleigh, NC 27603
p: 919-838-9600 f: 919-838-9700

lynchmykins now IMEG
301 N WEST STREET, SUITE 105
RALEIGH, NC 27603
919.782.1833 www.imegcorp.com

WESTERN SHELTER
ROOF FRAMING
PLAN

LAKE MYRA COUNTY PARK
Wake County, NC

REVISIONS

lynchmykins now IMEG
301 N WEST STREET, SUITE 105
RALEIGH, NC 27603
919.782.1833 www.imegcorp.com

IMEG RESERVES PROPRIETARY RIGHTS, INCLUDING COPYRIGHTS. TO THIS DRAWING AND THE DATA SHOWN THEREON. SAID DRAWING AND/OR DATA ARE THE EXCLUSIVE PROPERTY OF IMEG AND SHALL NOT BE USED OR REPRODUCED FOR ANY OTHER PROJECT WITHOUT THE EXPRESS WRITTEN APPROVAL AND PARTICIPATION OF IMEG. ©2025 IMEG CONSULTANTS CORP.
North Carolina Design Registration #F-1507

Date07/27/2026

WS-S102

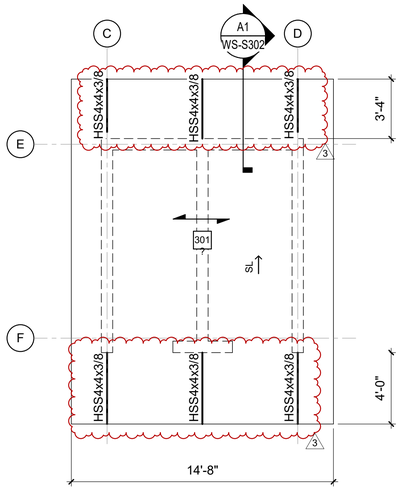

C1 WELL HOUSE ROOF FRAMING PLAN

1/4" = 1'-0"

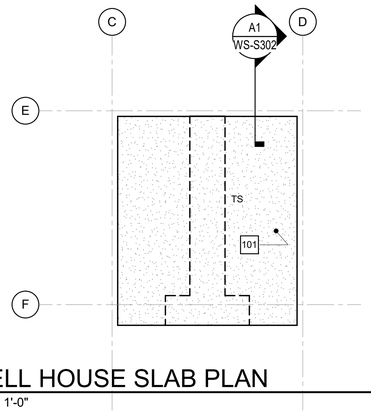

B1 WELL HOUSE SLAB PLAN

1/4" = 1'-0"

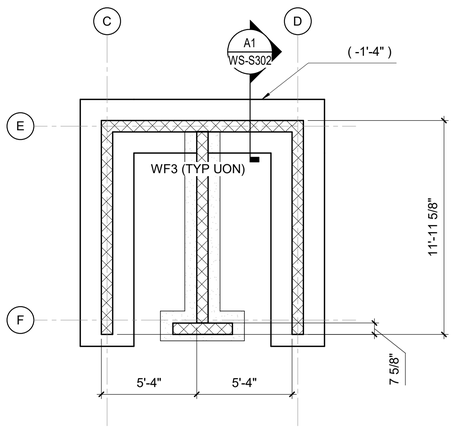

A1 WELL HOUSE FOUNDATION PLAN

1/4" = 1'-0"

FOUNDATION PLAN NOTES

A. REFERENCE ARCHITECTURAL DRAWINGS FOR DIMENSIONS TO NONBEARING WALLS, WALL CONTROL JOINTS AND OPENINGS.

B. UNLESS OTHERWISE NOTED, ALL ELEVATIONS ARE BASED ON A FINISHED FIRST FLOOR REFERENCE OF 0'-0". ACTUAL FINISHED FLOOR ELEVATION IS XX.XX'. FINISHED FLOOR ELEVATIONS AT EACH LEVEL ARE INDICATED ON SLAB PLANS. REFERENCE ARCHITECTURAL DRAWINGS FOR FINISHED FLOOR MATERIALS.

C. TOP OF ALL COLUMN AND WALL FOOTINGS MUST BE AT THE FOLLOWING ELEVATIONS UNLESS OTHERWISE NOTED ON PLAN. EXTERIOR WALL AND COLUMN FOOTINGS -1'-4". INTERIOR WALL FOOTINGS -0'-8".

D. NOT ALL UTILITY LOCATIONS ARE SHOWN ON PLAN. THE CONTRACTOR MUST COORDINATE THE LOCATIONS, SIZES, AND INVERTS OF UTILITIES. AT LOCATIONS WHERE UTILITIES PASS BELOW THE TOP OF FOOTING ELEVATION, STEP THE TOP OF FOOTING DOWN ON EACH SIDE PER THE "TYPICAL STEPPED FOOTING DETAIL" AND SLEEVE THE UTILITY THROUGH THE FOUNDATION WALL. THE CONTRACTOR MAY, AT HIS/HER OPTION, SLEEVE THE UTILITY THROUGH THE FOUNDATION PER THE "TYPICAL PIPE SLEEVE AT WALL FOOTING DETAILS."

E. UNLESS OTHERWISE INDICATED, EXTEND WALL FOOTINGS A MINIMUM OF 6 INCHES BEYOND ENDS OF WALLS.

F. NOT ALL SITE WALLS ARE SHOWN ON PLAN. CONTRACTOR MUST COORDINATE CIVIL AND LANDSCAPE DRAWINGS FOR SITE WALL INFORMATION.

G. DIMENSIONS SHOWN ON FOUNDATION PLAN ARE TO COLUMN GRIDLINES AND FACE OF FOUNDATION WALLS, UNLESS OTHERWISE NOTED.

FRAMING PLAN NOTES

A. REFERENCE FOUNDATION PLAN AND ARCHITECTURAL DRAWINGS FOR DIMENSIONS NOT SHOWN.

B. TOP OF FINISHED FLOOR ELEVATION MUST BE AS NOTED ON SLAB PLANS.

C. COMPOSITE STEEL BEAM FRAMING MUST BE EQUALLY SPACED BETWEEN POINTS OF KNOWN DIMENSIONS (NOT TO EXCEED [10'-0"] ON-CENTER).

D. CONCRETE ON ELEVATED METAL DECKS MUST BE POURED TO THE THICKNESS INDICATED.

E. AT STEEL ROOF FRAMING, BOTTOM OF DECK ELEVATIONS ARE SHOWN ON PLAN. INTERMEDIATE ELEVATIONS MUST BE STRAIGHT LINES BETWEEN GIVEN ELEVATIONS. INTERPOLATE AS REQUIRED FOR INTERMEDIATE BEARING ELEVATIONS, UNLESS OTHERWISE NOTED.

F. COORDINATE AND VERIFY ALL MEMBER LOCATIONS, DIMENSIONS, WEIGHTS, OPENING SIZES, AND CURB DIMENSIONS FOR ALL MECHANICAL EQUIPMENT WITH THE ACTUAL EQUIPMENT FURNISHED. INCLUDE THIS INFORMATION ON THE JOIST AND STRUCTURAL STEEL SHOP DRAWINGS.

SLAB PLAN NOTES

A. REFERENCE ARCHITECTURAL DRAWINGS FOR EXACT LIMITS OF SLAB DEPRESSIONS AND OMITTED SLABS.

B. FLOOR SINKS AND DRAINS ARE NOT SHOWN ON PLAN. REFERENCE PME DRAWINGS FOR LOCATIONS.

C. REFERENCE CIVIL AND LANDSCAPE DRAWINGS FOR EXTERIOR CONCRETE SLABS AND PAVING.

D. SLAB-ON-GRADE JOINTS MUST BE SAWED JOINTS OR KEYED CONSTRUCTION JOINTS, UNLESS OTHERWISE NOTED. CONTRACTOR MUST COORDINATE ALL SLAB JOINTS WITH JOINTS IN BONDED FLOOR FINISHES. REFERENCE ARCHITECTURAL DRAWINGS FOR FLOOR FINISH JOINT LOCATIONS.

E. PLACE (1) #4 x 3'-0" IN MIDDEPTH OF SLAB AT RE-ENTRANT CORNERS WHERE A SLAB JOINT DOES NOT OCCUR.

KEY NOTES

101	5" CONCRETE SLAB-ON-GRADE OVER VAPOR RETARDER AND 4" DEPTH OF POROUS FILL. REINFORCE WITH 6x6 W2.1xW2.1 WELDED WIRE REINFORCING.
301	2x6 TONGUE AND GROOVE WOOD DECKING WITH 9/16" PLYWOOD.

WALL FOOTING SCHEDULE

MARK	SIZE		REINFORCING		REMARKS
	WIDTH	DEPTH	CONTINUOUS	TRANSVERSE	
WF2.5	2' - 6"	1'-0"	(3) #5 BOT	#4 AT 36" OC BOT	-
WF3	3' - 0"	1'-0"	(4) #5 BOT	#4 AT 36" OC BOT	-
WF4	4' - 0"	1'-0"	(5) #5 BOT	#4 AT 36" OC BOT	-
WF6	6' - 0"	1'-0"	(7) #5 BOT	#4 AT 24" OC BOT	-

Susan Hatchell
Landscape Architecture, PLLC
711 W. North Street, Raleigh, NC 27603
p: 919-838-9600 f: 919-838-9700

lynchmykins now IMEG
301 N WEST STREET, SUITE 105
RALEIGH, NC 27603
919.782.1833 www.imegcorp.com

IMEG RESERVES PROPRIETARY RIGHTS, INCLUDING COPYRIGHTS, TO THIS DRAWING AND THE DATA SHOWN THEREON. SAID DRAWING AND/OR DATA ARE THE EXCLUSIVE PROPERTY OF IMEG AND SHALL NOT BE USED OR REPRODUCED FOR ANY OTHER PROJECT WITHOUT THE EXPRESS WRITTEN APPROVAL AND PARTICIPATION OF IMEG. ©2025 IMEG CONSULTANTS CORP.
North Carolina Design Registration #F-1507

WELL HOUSE PLANS

LAKE MYRA COUNTY PARK
Wake County, NC

REVISIONS

Date07/27/2026

WS-S103

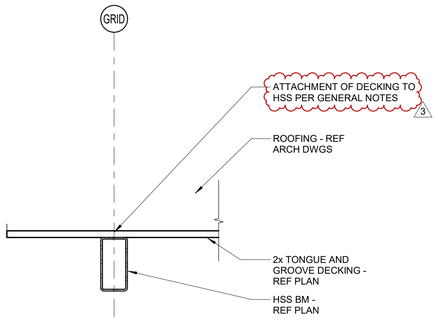

C1 SECTION
3/4" = 1'-0"

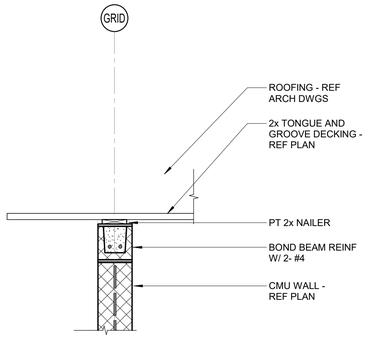

C2 SECTION
3/4" = 1'-0"

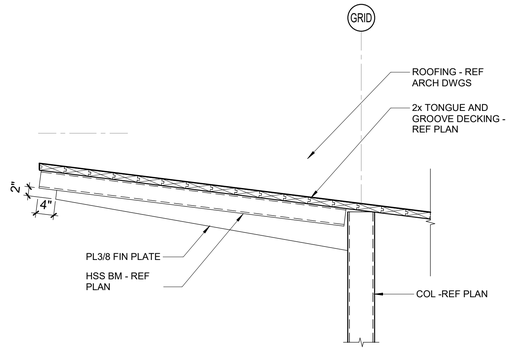

C3 SECTION
3/4" = 1'-0"
3

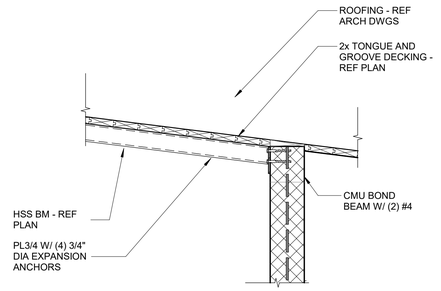

C4 SECTION
3/4" = 1'-0"

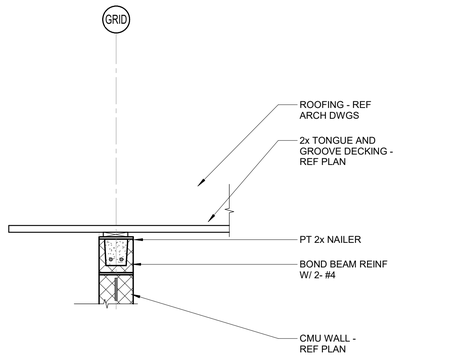

B1 SECTION
3/4" = 1'-0"

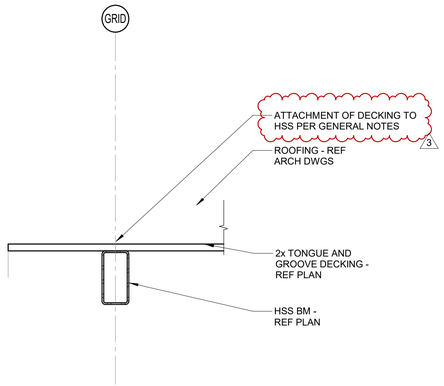

B2 SECTION
3/4" = 1'-0"

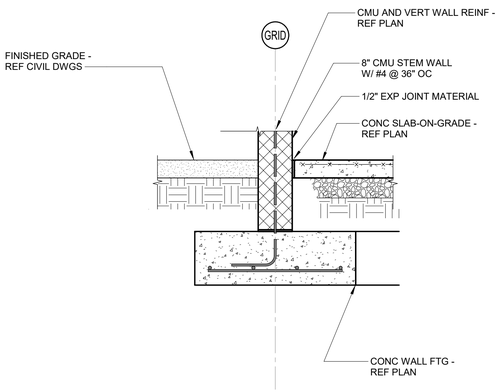

A1 SECTION
3/4" = 1'-0"

Susan Hatchell
Landscape Architecture, PLLC
711 W. North Street, Raleigh, NC 27603
p: 919-838-9600 f: 919-838-9700

lynchmykins now IMEG
301 N WEST STREET, SUITE 105
RALEIGH, NC 27603
919.782.1833 www.imegcorp.com

WELL HOUSE SECTIONS

LAKE MYRA COUNTY PARK
Wake County, NC

REVISIONS

lynchmykins now IMEG
301 N WEST STREET, SUITE 105
RALEIGH, NC 27603
919.782.1833 www.imegcorp.com

IMEG RESERVES PROPRIETARY RIGHTS, INCLUDING COPYRIGHTS, TO THIS DRAWING AND THE DATA SHOWN THEREON. SAID DRAWING AND/OR DATA ARE THE EXCLUSIVE PROPERTY OF IMEG AND SHALL NOT BE USED OR REPRODUCED FOR ANY OTHER PROJECT WITHOUT THE EXPRESS WRITTEN APPROVAL AND PARTICIPATION OF IMEG. ©2025 IMEG CONSULTANTS CORP.
North Carolina Design Registration #F-1507

Date 07/27/2026

WS-S302

SHLA - LAKE MYRA PARK - PHASE I
WAKE COUNTY, NORTH CAROLINA

SUBJECT ADDENDUM NO. 3 **9/29/2026**

To the Plans and Specifications for:

SHLA - Lake Myra Park - Phase I

Wake County, N.C.

TO: PROSPECTIVE BIDDERS AND OTHER CONCERNED PARTIES

This ADDENDUM forms a part of the Contract Documents and modifies the original Bidding Documents as noted below. Bidders shall acknowledge receipt of the ADDENDUM in the space provided on the Bid Form. Failure to do so may subject the Bidder to Disqualification.

A. Pre-Bid RFI Questions
   1. See full list of questions and answers provided by SHLA

B. Technical Specification Requirements
   1. Section 23 09 00 , Direct Digital Control and Building Automation Systems
      a. **Added specification**
   2. Section 23 81 26.13 , Small-Capacity Split-System Air Conditioners
      a. **Added notes about A2L Refrigerant**
      b. **Added notes about A2L Refrigerant Detection System**
   3.

C. Drawing Requirements
   1. Drawing No. MF-M601, Details & Schedules
      a. See Cloud areas
   2. Drawing No. PC-M701, Schedules
      a. See Cloud areas
   3. Drawing No. WS-M601, Details & Schedules
      a. See Cloud areas
   4. Drawing No. ES-P101, Floor Plans
      a. See Cloud areas
   5. Drawing No. MF-P105, Floor Plans
      a. See Cloud areas
   6. Drawing No. WS-P101, Plans
      a. See Cloud areas
   7. Drawing No. PC-P102, Basement Plumbing Plans
      a. See Cloud areas
   8. Drawing No. PC-P501, Plumbing Riser Diagrams
      a. See Cloud areas

FOR THE OWNER
THE WOOTEN COMPANY

BY _____
SCOTT ENNIS, P.E.

END OF DOCUMENT

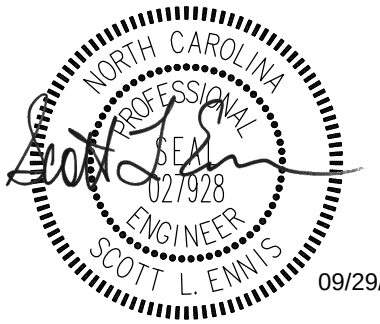

09/29/2026

SECTION 23 09 00 - DIRECT DIGITAL CONTROL AND BUILDING AUTOMATION SYSTEMS

PART 1 - GENERAL

1.01 REFERENCE STANDARDS

A. UL 864 - Control Units and Accessories for Fire Alarm Systems; Current Edition, Including All Revisions.

B. UL 916 - Energy Management Equipment; Current Edition, Including All Revisions.

1.02 SECTION INCLUDES

A. Control equipment.

B. Software.

C. Graphic Standards

1.03 RELATED DOCUMENTS

A. Drawings and general provisions of the Contract, including General and Supplementary Conditions and Division 01 Specification Sections, apply to this Section.

1.04 SUMMARY

A. This Section shall provide the Direct Digital Control (DDC), Energy Management and Building Automation System (BAS) for the air conditioning, heating and ventilating systems, lighting controls and shall interface with other microprocessor based building subsystems as shown on the drawings and as specified.

B. This controls specification includes hardware and software designed to control the building system with full graphical representation.

C. The controls vendor should ensure the building is operating independently of the graphics and has communication back to the GSA server housing the engineering or configuration software. All sequences should be fully functional and verified.

D. Related Section: Division 23 Section "Sequence of Operation" contains requirements that relate to this Section.

1.05 PRODUCTS FURNISHED BUT NOT INSTALLED UNDER THIS SECTION

A. Ductwork Accessories: Installation of flow stations, automatic dampers, smoke detectors. Connection of damper end switches Gas Piping: Installation of natural gas flow meters.

B. Water Flow: Installation of water flow meters.

C. Electric Metering: Installation of voltage and current measurement devices in electrical cabinets and the power circuit to the support the measurement device.

1.06 REFERENCES

A. ASHRAE standard 135-2010.
   1. ASME MC85.1.
   2. NEMA EMC1.

1.07 DEFINITIONS

A. BACnet: An industry standard data communications protocol for Building Automation Control Networks. Refer to ASHRAE standard 135-2010.

B. SEC-WAN- Secure Engineered Controls Wide Area Network - Ethernet based network linking remote Wake Co. Facilities with a central location for the purpose of transmitting and receiving building control information. Traffic over this network will be TCP/IP packets.

C. High Tier- That portion of the Vendor System that connects to the SEC-WAN directly using Ethernet as the physical medium. This is an open, interconnected system that each vendor must be capable of connecting to using standard Ethernet.

D. Building Level Network (BLN)- That portion of the Vendor System that connects the network controller to the specific monitoring and control devices in the building. Physical medium is serial (RS-485, RS-232) or Ethernet. Traffic over this network shall be BACnet MS/TP or BACnet IP under vendor created subnetwork.

E. Server- Centrally located, at General Services Center, 401 Capital Blvd., LAN attached, Rack-mounted server computer running Windows Server operating system. High Tier communicate to Server via Ethernet, TCP/IP connection.

F. Building Controller- located in each facility, continually monitors field devices to ensure proper function. The controller is standalone. The controller serves as a gateway between the BLN and the SEC-WAN.

G. TEC or ASC (Device Controller)- Connected to the Network Controller via TCP/IP, MS/TP, or/RS-485/RS-232E. Directly regulates field devices.

H. Workstation: Operating on latest County approved version of Microsoft Windows Operating System. Device used to send configuration data to either the server or the network controller. Used to upload field panel program to server or download field panel program from server to field panel. Field Devices- Pump controller, chiller controller, actuator, etc.

1.08 SYSTEM DESCRIPTION

A. Building Automation System (BAS) Contractor shall provide.
   1. A fully integrated building automation system (BAS), UL listed, incorporating direct digital control (DDC) for energy management, equipment monitoring and control, and lighting control capabilities; including interface by ethernet to the existing Wake County - Secure Engineered Controls Wide Area Network (SEC-WAN).
   2. Complete temperature and lighting control system to be DDC as specified herein.
   3. All wiring, conduit, panels, for all DDC temperature controls.
   4. All final electrical connections to each stand-alone Application Specific Controller and DDC Controller.
   5. BAS Contractor shall be responsible for all electrical work associated with the BAS control system and as called for on the Drawings.
      a. Perform all wiring in accordance with all local and national codes.
      b. Install all line voltage wiring, concealed or exposed, in accordance with Division 26.
      c. Electrical Contractor shall provide 120 volt, 20 amp circuits and circuit breakers from normal and/or emergency power panel for direct digital control systems.

d. BAS contractor to provide UPS power for Control Panel where indicated on drawings
e. Surge transient protection and power conditioners shall be incorporated in design of system to protect electrical components in all DDC Controllers, Application Specific Controllers and operator's workstations.
f. All low voltage electrical control wiring throughout the building shall be installed in accordance with Division 26. Except that digital control wiring and 24V power bus may be run without conduit in accessible ceiling spaces under the provision of NEC, Class 2 when approved.

B. General Product Description:
1. The building automation system (BAS) shall integrate multiple building functions including equipment supervision and control, alarm management, energy management, lighting control and historical data collection. The Building Automation System shall be fully compatible and shall be fully integrated with the existing system presently owned and operated by Wake County.
2. The building automation system shall consist of the following:
a. Connection of BAS by Ethernet to dedicated Wake County General Services Administration Building Controls Server. Additional software and programming for BAS Workstation, as specified.
b. Stand-alone DDC Controllers compatible with those already installed by Wake County.
c. Stand-alone Application Specific Controllers (ASCs.) (ie. Gateway to central building equipment).
3. The system shall be modular in nature and shall permit expansion of both capacity and functionality through the addition of sensors, actuators, DDC Controllers, Application Specific Controllers and operator devices.
4. System architectural design shall eliminate dependence upon any single device for alarm reporting and control execution. Each DDC Controller shall operate independently by performing its own specified control, alarm management, operator I/O and data collection. The failure of any single component or network connection shall not interrupt the execution of control strategies at other operational devices.
5. DDC Controllers shall be able to access any data from, or send control commands and alarm reports directly to, any other DDC Controller or combination of controllers on the network without dependence upon on network communication outside the controlled building. DDC Controllers shall also be able to send alarm reports to multiple operator workstations without dependence upon a central processing device.

1.09 SUBMITTALS

A. General: Submit each item in this Article according to the Conditions of the Contract and Division 01 Specification Sections. A minimum of 1 PDF set of documents are required. Building Number verification: The building number should be confirmed with GSA through official written construction communication.

B. BACnet instance number submittal per the form included in this specification will be completed. BACnet instance numbers are managed by Wake County and are assigned to individual devices. See instance number naming convention for the starting point. Building number and acronym should be confirmed with the County.

C. BACnet point names should be submitted for all equipment and physical points planned in the project. These point names should adhere to the County naming convention attached. PDF or spreadsheet submission for this specific submittal are acceptable.

D. Manufacturer's Product Data for each and all types of products specified. Include manufacturer's technical Product Data for each control device furnished, indicating dimensions, capacities, performance characteristics, electrical characteristics, finishes of materials, installation instructions, and startup instructions.
   1. Submit manufacturer's product information on all hardware items along with descriptive literature for all software programs to show compliance with specifications.

E. Shop Drawings from manufacturer detailing equipment assemblies and indicating dimensions, weights, loadings, required clearances, method of field assembly, components, and location and size of each field connection. Submit damper leakage and flow characteristics, plus size schedule for controlled dampers.

F. Shop Drawings, PDF, containing the following information for each control system:
   1. Schematic flow diagram showing fans, pumps, coils, dampers, valves, and control devices.
   2. Each control device labeled with setting or adjustable range of control.
   3. Diagrams for all required electrical wiring. Clearly differentiate between factory-installed and field-installed wiring.
   4. Details of control panel faces, including controls, instruments, and labeling.
   5. Written description of sequence of operation.
   6. Trunk cable schematic showing programmable control unit locations and trunk data conductors.
   7. Listing of connected data points, including connected control unit and input device. Itemized list should include each point name per Wake County's point name convention, the control point name and description.
   8. Devices with imported points which do not follow the County's point name convention should be converted in a field panel to follow the convention.
   9. System configuration showing peripheral devices, batteries, power supplies, diagrams, modems, and interconnections.
   10. Software description and sequence of operation. This shall include both printed and electronic copies of the program. It shall also include a layman's description of the sequence and a flow chart for a non-programmers interpretation.
   11. System configuration diagram showing all panel types and locations as well as communications network and workstations.

G. Graphics – Control graphics should be submitted to the county in PDF format. The graphics should be complete with point values populated or simulated to shot value font, size, color and unit of measure.

H. Wiring diagrams detailing wiring for power, signal, and control systems and differentiating clearly between manufacturer-installed and field-installed wiring.

I. Where installation procedures, or any part thereof, are required to be in accord with the recommendations of the manufacturer of the material being installed, printed copies of these recommendations shall be furnished to the Architect/Engineer prior to installation. Installation of the item will not be allowed to proceed until the recommendations are received.

1.10 ADDITIONAL REQUIREMENTS

A. Correction of Work:
   1. Contractor's Responsibility. The Contractor shall promptly correct all work the Owner finds defective or failing to conform to the Contract Documents. The Contractor shall bear all cost of correcting such work.
   2. During Warranty. If, within the warranty period required by the Contract Documents, any of the work is found to be defective in material or workmanship or not in accordance with the Contract Documents, the Contractor shall correct it promptly after receipt of notice from Owner to do so. Owner shall give notice promptly after discovery of the condition. Contractor shall notify owner within 24 hours of proposed corrections andschedule.

B. Coordination of Work During Construction:
   1. The Contractor shall protect the installed works by other trades.
   2. The Contractor shall coordinate with other trades.
   3. The Contractor shall repair any damage caused by his work to building(s) and equipment.
   4. The contractor shall maintain functionality of all existing systems throughout project.

C. Warranty and Service:
   1. Standard Warranty.
      a. The Contractor shall warrant the system to be free from defects in material and workmanship for a period of one (1) years from the date of completion and acceptance of the work by the Owner. Any defects shall be repaired or replaced, including materials and labor at no cost to Wake County.
   2. Wake County reserves the right to make changes to the BAS during the Warranty Period. Such changes do not constitute a waiver of warranty. Contractor shall warrant parts and installation work regardless of any such changes made by Wake County, unless the Contractor provides clear and convincing evidence that a specific problem is the result of such changes to the BAS.
   3. Service Response Requirements during the Warranty Period.
      a. Emergency Service: Any malfunction, failure, or defect in any hardware component or failure of any control programming that would result in property damage or loss of comfort control shall be corrected and repaired following telephonic, text, or email notification by the Owner to the Contractor. Emergency service shall be provided 24 hours per day, 7 days per week, and 365 days per year with no exceptions and at no cost to Wake County.
      b. Technician response by telephone, text, or email to any request for service shall be provided within two (2) hours of Wake County's initial request for service.
      c. In the event that the malfunction, failure, or defect is not corrected through the telephonic communication, at least one (1) hardware and software technician, trained in the system to be serviced, shall be dispatched to the Wake County site within four (4) hours of the Wake County initial request for such services, as specified.
      d. Normal Service: Any malfunction, failure, or defect in any hardware component or failure of any control programming that would not result in property damage or loss of comfort control shall be corrected and repaired following telephonic, text, or email notification by the Wake County to the Contractor.

e. Response by telephone, text, or email to any request for service shall be provided within eight (8) working hours (Contractor specified 40 hours per week normal working period) of the Wake County initial request for service.
f. In the event that the malfunction, failure, or defect is not corrected through the telephonic communication, at least one (1) hardware and software technician, trained in the system to be serviced, shall be dispatched to the Wake County site within three (3) working days of the Wake County initial request for such services, asspecified.
g. At any time during the Warranty Period that Contractor is on Site for maintenance, emergency, or normal service, Contractor shall notify Wake County and the local building operating personnel. Contractor shall notify said personnel of all work anticipated being involved for the service work. In addition, no work affecting system operation shall commence until express permission is granted. After the work is completed a work order ticket describing in detail all work performed (i.e. hardware replaced or serviced, software or firmware modifications made, etc.), hours worked, follow-up work required, etc., must be signed by an authorized building operator.
h. Wake County Telephonic Request for Service: Contractor shall specify a maximum of three telephone numbers for Wake County to call in the event of a need for service. At least one of the lines shall be attended at any given time at all times. Alternatively, text messaging can be used for technicians trained in system to be serviced. One of the three notified technicians shall respond to every call within 15 minutes.
i. Technical Support: Contractor shall provide technical support by telephone throughout the Warranty Period.
j. Preventive maintenance shall be provided throughout the Warranty Period in accordance with the hardware component manufacturer's requirements.
k. In the last month of the Warranty Period, all System software and controller firmware, software, drivers, etc. will be upgraded to the latest release (version) in effect at the end of the Warranty Period.

D. Post-warranty Service.
1. Contractor shall ensure accessibility to technical support and replacement parts for ten (10) years past the warranty period.

1.11 PROJECT RECORD DOCUMENTS

A. Submit under provision of Division 01.

B. Accurately record actual location of control components, including but not limited to, panels, thermostats, and sensors.

C. Revise shop drawings to reflect actual installation and operating sequences.

D. Include data specified in "Submittals" in final "Record Documents" form in hard copy form and in CAD. (DWG or DXF format).

E. Include a USB drive backup of all BAS control programs in addition to server backup.

1.12 OPERATION AND MAINTENANCE DATA

A. Submit under provisions of Division 01.

B. Maintenance instructions and spare parts list for each type of control device.

C. Interconnection wiring diagrams with identified and numbered system components and devices.

D. Final shop drawings should be printed and located in a document sleeve within each control panel.

E. Keyboard illustrations and step-by-step procedures indexed for each operator function.

F. Inspection period, cleaning methods, cleaning materials recommended, and calibration tolerances.

G. Calibration records and list of set points.

H. Submit quotation for annual maintenance service for after the warranty period.

1.13 QUALIFICATIONS & QUALITY ASSURANCE

A. Materials and equipment shall be the catalogued products of manufacturers regularly engaged in production and installation of automatic temperature control systems and shall be manufacturer's latest standard design that complies with the specification requirements.

B. Install system using competent workmen who are fully trained in the installation of temperature control equipment.

C. Single source responsibility of supplier shall be the complete installation and proper operation of the BAS and control system and shall include debugging and proper calibration of each component in the entire system.

D. Supplier shall have an in-place support facility within 50 miles of the site with technical staff, spare parts inventory and all necessary test and diagnostic equipment.

E. All electronic equipment shall conform to the requirements of FCC Regulation, Part 15, Section 15, Governing Radio Frequency Electromagnetic Interference and be so labeled.

F. BAS shall comply with UL 916 PAZX and 864 UDTZ and be so listed at the time of bid.

G. Design and build all system components to be fault-tolerant.
   1. Satisfactory operation without damage at 110% and 85% of rated voltage and at plus or minus 3 Hertz variation in line frequency.
   2. Static, transient and short-circuit protection on all inputs and outputs.
   3. Protect communication lines against incorrect wiring, static transients and induced magnetic interference.
   4. Network-connected devices to be A.C. coupled or equivalent so that any single device failure will not disrupt or halt network communication.
   5. All real time clocks and data file RAM to be battery-backed for a minimum 72 hours and include local and system low battery indication.
   6. It must be possible to receive and print out alarms at a central location even when the Server/workstation at that location is nonoperational or taken out of service for periodic maintenance.

H. Supplier shall be either the authorized regional manufacturer's representative as such with Siemens Building Technologies, Inc., Schneider Electric, or the manufacturer's Authorized Controls Integrator as such with Honeywell International, Inc.

1.14 PRE-INSTALLATION CONFERENCE

A. Convene a conference two weeks prior to commencing work of this Section, under provisions of Division 01.

B. Require attendance of parties directly affecting the work of this Section. Controls technicians familiar with the controls wiring and programming are required to attend.

1.15 COORDINATION

A. The Control System contractor shall schedule and attend a pre-submittal (prior to submission of control diagrams) meeting with Owner for purposes of resolving any potential problems regarding the interface of the proposed system with those existing within General Services and present schedule for approval.

B. A controls technician familiar with the controls wiring and programming are required to attend both biweekly meetings and commissioning meetings when scheduled.

C. BACnet instance number submittal sheet must be submitted to GSA to obtain BACnet instance IDs. Equipment should not be connected to the network until configured with the Instance IDs provided.

D. The control system contractor shall adhere to the Wake County equipment and point naming convention. Controls system contractor shall schedule a nomenclature coordination meeting to occur after notice to proceed, but before contractor begins DDC work. Nomenclature must be approved by GSA. Incorrect point names will be required to be corrected by the completion of the project.

E. Programming of Control system modifications necessitated by this Project will be done at the General Services' terminal located at 401 Capital Blvd., Raleigh, NC or on-site as necessary. This programming will be complete by the authorized Programmer representing the Control System contractor. Coordination of Owner specified point designations and scheduling of the programming will be the responsibility of the Control System contractor (to be coordinated with Owner). Programming must be done prior to Wake County acceptance of system maintenance responsibility. Any option to perform remote programming or configuration is only allowed at the discretion of the County and is not guaranteed.

F. System Start-up and Acceptance: Upon completion of the installation, start-up the system and perform all necessary testing. When the system performance is deemed satisfactory in whole or part by Architect/Engineer and by the Wake County Representative, designated by Wake County officials, the system parts will be accepted for beneficial use and placed under warranty. Warranty shall not commence prior to receipt of certificate of completion from Architect/Engineer.

G. System Testing and Balancing: The Control System contractor shall participate in the Testing and Balancing of the HVAC System and Wake County GSA Representative. The control contractor shall support the Testing and Balancing contractor through the entirety of balancing.

PART 2 - PRODUCTS

2.01 ACCEPTABLE MANUFACTURERS

A. Ecostruxure, by Schneider Electric.

B. Honeywell International, Inc. (ACI).

C. Siemens Building Technologies, Inc. APOGEE.

2.02 NETWORK

A. All networked control products shall be comprised of an industry standard open protocol internetwork. Communication involving control components (i.e. all types of controllers and operator interfaces) shall conform to ASHRAE 135-2010 BACnet standard. Networks and protocols proprietary to one company or distributed by one company are prohibited.

B. Access to system data shall not be restricted by the hardware configuration of the building management system. The hardware configuration of the BMS network shall be totally transparent to the user when accessing data or developing control programs.
   1. Software applications, features, and functionality, including administrative configurations, shall not be separated into several network control engines working together.

C. BAS Server shall be capable of simultaneous direct connection and communication with BACnet/IP corporate level networks without the use of interposing devices.

D. Any break in Ethernet communication from the PC to the controllers on the Primary Network shall result in a notification at the PC.

E. Any break in Ethernet communication between the standard client and server workstations on the Primary Network shall result in a notification at each workstation.

F. The network architecture shall consist of two levels of networks:
   1. The High Tier level network shall be BACnet/IP over Ethernet. It shall network the Building Automation Server, Operator workstations, and Building level controllers. Provide network media converters, routers and switches as necessary for a complete network.

G. The Floor level network shall be BACnet over the native infrastructure (i.e. if BACnet MS/TP native, all devices should communicate over MS/TP. If BACnet IP native, all devices should communicate over IP to a dedicated BMS router placed inside a BMS enclosure). It shall network to all of the DDC controlled equipment on a floor or in a system and network to a router that connects to the Automaton level BAS backbone. Controllers for the central plant and large infrastructure air handlers shall reside on the backbone BACnet/IP network. The Building Level Controllers shall be able to support subnetwork protocols that may be needed depending on the type of equipment or application. Subnetworks shall be limited to:
   1. BACnet MS/TP.
   2. Modbus.
   3. BACnet IP (On dedicated BMS sub-network).

H. Use fiber optic cabling for all Ethernet runs longer than 300 ft.

I. Where a smoke control application is required, provide UL 864 / UUKL listed network switches, and NFPA approved cabling, enclosures and installation methods.

J. The system shall be installed with a 10% spare capacity on each subnetwork for the addition of future controllers.

2.03 DISTRIBUTED CONTROL REQUIREMENTS

A. The loss of any one DDC controller shall not affect the operation of other HVAC systems, only for the points connected to the DDC controller.

B. The system shall be scalable in nature and shall permit expansion of both capacity and functionality through the addition of sensors, actuators, DDC Controllers, and operator devices.

C. System architectural design shall eliminate dependence upon any single device for alarm reporting and control execution. Each DDC Controller shall operate independently by performing its own specified control, alarm management, operator I/O, and data collection. The failure of any single component or network connection shall not interrupt the execution of any control strategy, reporting, alarming and trending function, or any function at any operator interface device.

D. DDC Controllers shall be able to access any data from, or send control commands and alarm reports directly to, any other DDC Controller on the network without dependence upon a central processing device. DDC Controllers shall also be able to send alarms to multiple operator workstations without dependence upon a central or intermediate processing device.

2.04 SERVER: EXISTING SERVER

A. Owner will provide specifications of existing server upon request.

B. OWNER will provide necessary hardware and software to ensure that the server is backed up fully on a daily basis and could be quickly restored if necessary.

C. Vendor will provide and install any add on software not native to the Network Operating System to ensure full functionality resulting from the addition of this contract in the area of reporting capability and database storage (SQL Server, Sybase, Crystal Reports, etc.). Vendor should verify the installation of the software is adequate to meeting the project requirements.

D. OWNER will ensure that the server is backed up by an UPS to prevent power outage.

E. If owner does not possess manufacturers' high-tier equipment, vendor must supply server per Wake County standards, 1 workstation, and all software necessary to connect and control building per this document. Specifications should be confirmed prior to bid.

2.05 BAS SOFTWARE

A. Overview.
   1. The BAS Contractor shall provide system software capable of engineering level configuration. A thick client GUI shall provide comprehensive user interface and configuration tools to view and edit graphics, controller-level programming, points, schedules, trends, and alarms. Controller programming must be able to be viewed, edited, backed up and reloaded to the controller over the network.
   2. The BAS Contractor shall provide system software based on server/thin-client architecture, designed around the open standards of web technology. The BAS server shall communicate using Ethernet and TCP\IP. Server shall be accessed using a web browser over Owner virtual private network.

3. Graphic software shall facilitate user-friendly interface to all aspects of the System Software. The intent of this Specification is to require a graphic package that provides for intuitive operation of the systems without extensive training and experience. It shall facilitate logical and simple system interrogation, modification, configuration, and diagnosis. The Operator Interface shall provide for overall system supervision, graphical user interface, management report generation, alarm annunciation, and remote monitoring. The system shall be capable of supporting an unlimited number of clients.
4. The number of network controllers required is dependent on the type and quantity of devices installed. It is the responsibility of the Contractor to determine the quantity and type of devices. The Contractor shall be responsible to properly install the correct number (increase if required) of network controllers from the designed minimum shown on the BAS documents. The Contractor shall confirm the designed network load and architecture with the capabilities of the selected Network Controller. If network communications issues arise as a result of a limited Network Controller resource count the Network Integrator shall furnish, install, and implement additional Network Controllers to reduce the network traffic on each Network Controllers Local Operating Network to less than 50% of maximum bandwidth as recommended by the manufacturer. The total capacity includes all imbedded applications as well as design specific applications.
5. The web browser GUI shall by HTML5 compatible and provide an interactive user interface and must offer and be configured with the following features as a minimum:
    a. Trending.
    b. Scheduling.
    c. Real time ’live’ Graphic Programs.
    d. Tree Navigation.
    e. Parameter change of properties.
    f. Set-point Adjustments.
    g. Alarm / Event information.
6. Software Components: All software components of the BAS system software shall be provided and installed as part of this project. BAS software components shall include:
    a. System Configuration Utilities for future modifications to the system, and controllers shall include all software and programming not specifically itemized in these specifications, which is necessary to implement, maintain, operate, and diagnose the system in compliance with these Specifications.
    b. Graphical Programming Tools.
    c. Direct Digital ControlSoftware.
    d. Application Software.

B. General:
    1. All necessary software to form a complete operating system as described in this specification shall be provided.
    2. The software programs specified in this Section shall be provided as an integral part of DDC Controllers and shall not be dependent upon any higher level computer for execution.
    3. All digital points shall have user defined two-state status indication (descriptors with minimum of 8 characters allowed per state (i.e. summer/winter).
    4. All subsystems that can stop or disrupt the program shall be graphically displayed as red/green status.

5. The software shall be provided with an interactive HELP function to assist operators with syntax, abbreviations, commands and saving programs.

C. Control Software Description:
   1. The DDC Controllers shall have the ability to perform the following pre-tested control algorithms:
      a. Two-position control.
      b. Proportional control.
      c. Proportional plus integral control.
      d. Proportional, integral, plus derivative control.
      e. Automatic tuning of control loops.
   2. Control sequence shall include a provision for limiting the number of times each piece of equipment may be cycled within any one-hour period.
   3. The system shall provide protection against excessive demand situations during start-up periods by automatically introducing time delays between successive start commands to heavy electrical loads.
   4. Upon the resumption of normal power, each DDC Controller shall analyze the status of all controlled equipment, compare it with normal occupancy scheduling and turn equipment on or off as necessary to resume normal operations.

D. Scheduling:
   1. Building controllers must store and use operating schedules. BACnet schedules are preferred.
   2. Schedules shall reside in the building controller and shall not rely on external processing or network.
   3. It shall be possible to define a group of objects as a custom event (i.e., meeting, athletic activity, etc.). Events can then be scheduled to operate all necessary equipment automatically.
   4. For points assigned to one common load group, it shall be possible to assign variable time delays between each successive start and/or stop within that group.
   5. The operator shall be able to define the following information:
      a. Time, day.
      b. Commands such as on, off, auto, etc.
      c. Time delays between successive commands.
      d. There shall be provisions for manual overriding of each schedule by an authorized operator.
   6. It shall be possible to schedule calendar-based events up to one year in advance based on the following:
      a. Weekly Schedule. Provide separate schedules for each day of the week. Each of these schedules should include the capability for start, stop, optimal start, optimal stop, and night economizer. When a group of objects are scheduled together as an Event, provide the capability to adjust the start and stop times for each member.
      b. Exception Schedules. Provide the ability for the operator to designate any day of the year as an exception schedule. Exception schedules may be defined up to a year in advance. Once an exception schedule is executed, it will be discarded and replaced by the standard schedule for that day of the week.

7. Schedule Categories: The system shall allow operators to define and edit scheduling categories (for example, lighting, HVAC occupancy, etc.). Unless otherwise defined in the project documents, separate schedules should be defined for:
    a. AHU Occupancy.
    b. Exterior Lighting Schedule.
    c. Interior Lighting Schedule.

E. DDC Controllers shall have the ability to perform all the following energy management routines:
1. Time-of-day scheduling.
2. Calendar-based scheduling.
3. Holiday scheduling.
4. Temporary schedule overrides.
5. Start-Stop Time Optimization.
6. Automatic Daylight Savings Time Switchover.
7. Night setback control.
8. Temperature-compensated duty cycling.
9. Heating/cooling interlock (to prevent system overlap).
10. Equipment sequencing.
11. Control Loop Algorithm.
12. Adaptive Loop Tuning.

F. DDC Controllers shall be able to execute custom, job-specific processes defined by the user, to automatically perform calculations and special control routines.
1. It shall be possible to use any of the following in a custom process:
    a. Any system measured point data or status.
    b. Any calculated data.
    c. Any results from other processes.
    d. User-defined constants.
    e. Arithmetic functions (+, - * /, square root, exp, etc.).
    f. Boolean logic operators (and/or, exclusive or, etc.).
    g. On-delay/off-delay/one-shot timers.
2. Custom processes may be triggered based on any combination of the following:
    a. Time interval.
    b. Time-of-day.
    c. Date.
    d. Other processes.
    e. Time programming.
    f. Events (e.g., point alarms).
3. A single process shall be able to incorporate measured or calculated data from any and all other DDC Controllers on the network. In addition, a single process shall be able to issue commands to points in any and all other DDC Controllers on the network.
4. Processes shall be able to generate operator messages and advisories to operator I/0 devices. A process shall be able to directly send a message to a specified device or cause the execution of a dial-up connection to a remote device such as a printer or pager.

5. The custom control programming feature shall be documented via English language descriptors. The document shall include plain English version of programming for a clear understanding of code and the program. It shall also include a layman's description of the sequence and a flow chart for a non-programmers interpretation.
6. DDC and HVAC Mechanical Equipment Controller shall be capable of comment lines for sequence of operation explanation.
7. Programming shall provide owner with the ability to override reset schedules per point at all user interfaces.

G. A variety of historical data collection utilities shall be provided to manually or automatically sample, store and display system data for points as specified in the I/0 summary.
   1. DDC Controllers shall store point history data for selected analog and digital inputs and outputs:
      a. Any point, physical or calculated may be designated for trending. Any point, regardless of physical location in the network, may be collected and stored in each DDC Controllers point group. Two methods of collection shall be allowed: either by a pre-defined time interval or upon a pre-defined change of value. Sample intervals of 1 minute for a 24-hour period shall be provided. Each DDC Controller shall have a dedicated RAM based buffer for trend data and shall be capable of storing a minimum of 25,000 data samples. Provide additional RAM capacity internal or external to the DDC Controller as necessary to meet this requirement.
      b. If buffer in each DDC Controller in a building over 100,000 square feet cannot store 25,000 data samples, provide additional Controllers in Mechanical Equipment Room to obtain required minimum data storage.
   2. Trend data shall be stored at the DDC Controllers and uploaded to the server when retrieval is desired. Uploads shall occur based upon either user-defined interval, manual command or when the trend buffers are full. All trend data shall be available for use in 3rd party personal computer applications.

H. DDC Controllers shall have the capability to automatically accumulate and store run-time hours for digital input and output points as specified in the point I/0 summary.
   1. The totalization routine shall have a sampling resolution of one minute or less.
   2. The user shall have the ability to define a warning limit for runtime totalization. Unique, user-specified messages shall be generated when the limit is reached.

I. DDC Controllers shall have the capability to automatically sample, calculate and store consumption totals on a daily, weekly or monthly basis for user-selected analog and digital pulse input type points as specified in the point I/0 summary.
   1. Totalization shall provide calculation and storage of accumulations of up to 99,999.9 units (e.g., KWH, gallons, BTU, tons, etc.).
   2. The totalization routine shall have a sampling resolution of one minute or less.
   3. The user shall have the ability to define a warning limit. Unique, user-specified messages shall be generated when the limit is reached.

J. DDC Controllers shall have the ability to count events such as the number of times a pump or fan system is cycled on and off. Event totalization shall be performed on a daily, weekly or monthly basis for points as specified in the point I/0 summary.
   1. The event totalization feature shall be able to store the records associated with a minimum of 9,999.9 events before reset.

2. The user shall have the ability to define a warning limit. Unique, user-specified messages shall be generated when the limit is reached.

K. The network shall allow the DDC Controllers to access any data from or send control commands and alarm reports directly to any other DDC and HVAC Mechanical Equipment Controller or combination of controllers on the network without dependence upon a central or intermediate processing device. DDC and HVAC Mechanical Equipment Controllers shall send alarm reports to multiple workstations without dependence upon a central or intermediate processing device. The peer-to-peer network shall also allow any DDC and HVAC Mechanical Equipment Controller to access, edit, modify, add, delete, back up, and restore all system point database and all programs.

L. System Security: System shall be capable of multi-level access through Login Name and Password. Access to different areas of the BAS system shall be defined in terms of Roles, Privileges and geographic area of responsibility asspecified:
   1. User access shall be secured using individual security passwords and user names.
   2. Passwords shall restrict the user to the objects, applications, and system functions as assigned by the system manager.
   3. Building Controllers shall be able to assign a minimum of 50 passwords access and control priorities to each point individually. The logon password (at any Operator Interface or portable operator terminal) shall enable the operator to monitor, adjust and control only the points that the operator is authorized for. All other points shall not be displayed at the Operator Interface or portable terminal. Passwords and priorities for every point shall be fully programmable and adjustable.
   4. User Log On/Log Off attempts shall be recorded.
   5. The system shall protect itself from unauthorized use by automatically logging off following the last keystroke. The delay time shall be user-definable.
   6. Use of workstation resident security as the only means of access control is not an acceptable alternative to resident system security in the DDC controller software.

M. Alarm Management:
   1. Alarm management shall be provided within the controller software to monitor and direct alarm information to operator devices.
   2. Each Building Controller shall perform distributed, independent alarm analysis, minimize network traffic and prevent alarms from being lost. At no time shall the Building Controllers ability to report alarms be affected by either operator or activity at a PC workstation, local I/O device or communications with other panels on the network.
   3. Conditional alarming shall allow generation of alarms based upon user defined multiple criteria.
   4. An Alarm “shelving” feature shall be provided to disable alarms during testing. (Pull the Plug, etc.).
   5. Binary Alarms. Each binary alarm object shall be set to alarm based on the operator-specified state. Provide the capability to automatically and manually disable alarming.
   6. Analog Alarms. Each analog alarm object shall have both high and low alarm limits. Alarming must be able to be automatically and manually disabled.

7. All alarm shall include the point's user-defined language description and the time and date of occurrence.
8. Paged alarm messages shall be routed to user-defined list of phone numbers via SMS messages.
9. The user shall be able to add a 200-character alarm message to each alarm point to more fully describe the alarm condition or direct operator response. Each Building Controller shall be capable of storing a library of at least 50 alarm. Each message may be assigned to any number of points in the Controller.
10. Operator-selected alarms shall be capable of initiating a trigger to an advanced annunciation, such as text, email, etc.
11. An alarm history log shall report the start of the alarm condition, acknowledgement by a user and return of the alarm to normal condition.

N. Trends: Trends shall both be displayed and user configurable through the Web Browser GUI or thick client. Trends shall be capable on all analog, digital, calculated, and integrated points. A trend log's properties shall be editable using the Navigation Tree and Graphic Pane. Trends must be must user configurable from the thick/thin client including creating new trends on all connected items. Trends that must be set up with a separate configuration tool are NOT acceptable.
    1. Viewing Trends: The operator shall have the ability to view trends by using the Navigation Tree and selecting a Trends button in the Graphic Pane located on every page. The system shall allow y- and x-axis maximum ranges to be specified and shall be able to simultaneously graphically display multiple trends per graph.
    2. Local Trends: Trend data shall be collected locally by a Controller located in the building, and periodically uploaded to the BAS server if historical trending is enabled for the object. Trend data, including run time hours and start time date shall be retained in non-volatile module memory. Systems that rely on a gateway/router to run trends are NOT acceptable.
    3. Server/Long Term Trends: Trend data shall be collected periodically by the server and must have demonstrable capability of storing for a minimum of 2 years. Server must provide the ability to easily download at least 2 years' worth of data for multiple points simultaneously to a .csv or Microsoft Excel file with one export.
    4. Events: Events shall be logged for review by the operator, engineering or management personnel. The system shall log each new operator log-on, and whenever an operator changes a set-point or turns any device on or off. Each time the event log records an event, it will record the operator logged in and the type of action taken (set-point change, state change, etc.), along with a date and time stamp.
    5. Resolution. Sample intervals shall be as small as one second. Each trended point will have the ability to be trended at a different trend interval. When multiple points are selected for displays that have different trend intervals, the system will automatically scale the axis.
    6. Dynamic Update. Trends shall be able to dynamically update at operator-defined intervals.
    7. Zoom/Pan. It shall be possible to zoom-in on a particular section of a trend for more detailed examination and 'pan through' historical data by simply scrolling themouse.
    8. Numeric Value Display. It shall be possible to pick any sample on a trend and have the numerical value displayed.

9. Copy/Paste. The operator must have the ability to pan through a historical trend and copy the data viewed to the clipboard using standard keystrokes (i.e. CTRL+C, CTRL+V).

O. Graphical User Interface.
   1. Web Browser Navigation: The Thin Client web browser GUI shall provide a comprehensive user interface. Using a collection of web pages, it shall be constructed to “feel” like a single application and provide a complete and intuitive mouse/menu driven operator interface. It shall be possible to navigate through the system using a web browser to accomplish requirements of this specification. The Web Browser GUI shall (as a minimum) provide for navigation, and for display of animated graphics, schedules, alarms/events, live graphic programs, active graphic setpoint controls, configuration menus for operator access, reports, and reporting actions for events and trends.
   2. Login: On launching the web browser and selecting the appropriate domain name or IP address, the operator shall be presented with a login page that will require a login name and password. Navigation in the system shall be dependent on the operator’s role privileges.
   3. Navigation: Navigation through the GUI shall be accomplished by clicking on appropriate level of a navigation tree (consisting of expandable and collapsible tree control like Microsoft’s Explorer program), and/or by selecting dynamic links to other system graphics. Both the navigation tree and action pane shall be displayed simultaneously, enabling the operator to select a specific system or equipment, and view the corresponding graphic.
   4. Actions: The web interface shall provide several functional views for each HVAC or mechanical/electrical subsystem specified. A functional view shall be accessed by clicking on the corresponding button:
      a. Graphics: Using graphical format suitable for display in a web browser, graphics shall include, color building floor-plans, equipment drawings, active graphic set-point controls, web content and other valid HTML elements. Real-time values displayed on a Web page shall update automatically without requiring a manual “refresh” of the Webpage.
      b. Properties: Shall include graphic controls and text for the following: Locking or overriding objects, demand strategies, and any other valid data required for setup. Changes made to the properties pages shall require the operator to depress an ‘accept/cancel’ button.
      c. Schedules: Shall be used to create, modify/edit and view schedules based on the systems geographical hierarchy (using the navigation tree). The Web browser shall provide the same view of the system, in terms of graphics, schedules, calendars, logs, etc., and provide the same interface methodology as is provided by the Graphical User Interface. Systems that require different views or that require different means of interacting with objects such as schedules, or logs, shall not be permitted.
      d. Alarms: Shall be used to view alarm information geographically (using the navigation tree), acknowledge alarms, sort alarms by category, actions and verify reporting actions.
      e. Trends: Shall be used to display associated trend and historical data, modify colors, date range, axis and scaling.

2.06 BUILDING CONTROLLER

A. The Building Controller shall be able to operate as a standalone panel and shall not be dependent upon any higher level computer or another controller for operation. The controller Controllers shall combine both network routing functions, control functions, and server functions into a single unit. The controller shall be multi-tasking, multi-user, real-time digital control processors consisting of modular hardware with plug-in enclosed processors, communication controllers, power supplies and input/output point modules. Controller size shall be sufficient to fully meet the requirements of this specification and the attached point list. Schedules shall reside in the building controller and only rely on the central server for updates.

B. The Building controller shall be classified as a “native” BACnet device, supporting the BACnet Network Server Controller (B-BC) profile. NSCs shall be tested and certified by the BACnet Testing Laboratory (BTL) as BACnet Network Server Controllers (B-BC).

C. Each DDC controller shall have a manual override point present on the controller so that the equipment may be operated directly from the controller.

D. This level of controller shall be used for the following types of systems:
   1. Air handlers.
   2. Systems with over 24 input/output points.

E. Computing power and memory minimum:
   1. A 32-bit, stand-alone, multi-tasking, multi-user, real-time 100MHz digital control microprocessor module.
   2. Inputs shall be 16-bit minimum analog-to-digital resolution.
   3. Outputs shall be 10-bit minimum digital-to-analog resolution.
   4. Memory module (24 Megabyte, minimum) to accommodate all Primary Control Panel software requirements, including but not limited to, its own operating system and databases (see Controllers Software section), including control processes, energy management applications, alarm management applications, historical/trend data for points specified, maintenance support applications, custom processes, operator I/O, dial-up communications.
   5. Real time clock and battery.
   6. Data collection/ Data Trend module sized for 10,000 data samples.
   7. Flash Memory Firmware: Each Building Level Control Panel shall support firmware upgrades without the need to replace hardware.

F. Onboard or Modular hardware and connections:
   1. Primary Network communication module for primary network communications.
   2. Secondary Network communication module for secondary network communications.
   3. RJ45 port: Minimum 10/100Mbaud.
   4. RS485 ports for subnetworks and point expansion.
   5. Human Machine Interface port (HMI).
   6. USB Port.

G. Input and Output Points Hardware:
   1. Input/output point modules as required including spare capacity.
   2. Monitoring of the status of all hand-off-auto switches.
   3. Monitoring of all industry standard types of analog and digital inputs and outputs, without the addition of equipment to the primary control panel.

4. Local status indication for each digital input and output for constant, up-to-date verification of all point conditions without the need for an operator I/O device. Each primary control panel shall perform diagnostics on all inputs and outputs and a failure of any input or output shall be indicated both locally and at the operator workstation.
5. Graduated intensity LEDs or analog indication of value for each analog output.

H. Each DDC Controller shall support:
   1. Monitoring of the following types of inputs, without the addition of equipment outside the DDC Controller cabinet:
      a. Analog inputs.
         1) 4-20 mA.
         2) 0-10 Vdc.
         3) Thermistors.
         4) 1000 ohm RTDs.
      b. Digital inputs.
         1) Dry contact closure.
         2) Pulse Accumulator.
         3) Voltage Sensing.
   2. Direct control of electronic actuators and control devices. Each DDC Controller shall be capable of providing the following control outputs without the addition of equipment outside the DDC Controller cabinet:
      a. Digital outputs (contact closure).
         1) Contact closure (motor starters, sizes 1-4).
      b. Analog outputs.
         1) 4-20 mA.
         2) 0-10 Vdc.

I. Each DDC Controller / network router shall have a minimum of 10%spare capacity for future point connection. The type of spares shall be in the same proportion as the implemented I/0 functions of the panel, but in no case shall there be less than two spares of each implemented I/0 type. Provide all processors, power supplies and communication controllers complete so that the implementation of a point only requires the addition of the appropriate point input/output termination module and wiring.
   1. Provide sufficient internal memory for the specified control sequences and have at least 25% of the memory available for future use.

J. Each DDC Controller shall continuously perform self-diagnostics, communication diagnosis and diagnosis of all panel components. The DDC Controller shall provide both local and remote annunciation of any detected component failures, low battery conditions or repeated failure to establish communication.

K. In the event of the loss of normal power, there shall be an orderly shutdown of all DDC Controllers to prevent the loss of database or operating system software. Non-volatile memory shall be incorporated for all critical controller configuration data and battery backup shall be provided to support the real-time clock and all volatile memory for a minimum of 60 days. Controls Contractor shall provide external battery back-up, if necessary to meet this requirement.
   1. Upon restoration of normal power, the DDC Controller shall automatically resume full operation without manual intervention.

L. Building Level Controllers shall have the capability to serve as a gateway between Modus subnetworks and BACnet objects. Provide software, drives and programming.

M. Isolation shall be provided at all primary control panel terminations, as well as all field point terminations to suppress induced voltage transients consistent with IEEE Standards 587-1980.

N. Code compliance:
   1. Approvals and standards: UL 916; CE; FCC.
   2. Provide UL 864-UUKL where called for in the sequences of operations.

O. Accessories:
   1. Appropriate NEMA rated metal enclosure.
   2. Power supplies as required for all associated modules, sensors, actuators, etc.

P. The operator shall have the ability to manually override automatic or centrally executed commands at the primary control panels via local, point discrete, on-board hand/off/auto operator override switches. If on board switches are not available, provide separate control panels with HOA switches. Mount panel adjacent to primary control panel. Provide hand/off/auto switch for each digital output, including spares.

Q. Environment.
   1. Controller hardware shall be suitable for the anticipated ambient conditions.
   2. Controllers used outdoors and/or in wet ambient conditions shall be mounted within waterproof enclosures and shall be rated for operation at 0°C to 49°C (32°F to 120°F).
   3. Controllers used in conditioned space shall be mounted in dust-proof enclosures and shall be rated for operation at 0°C to 49°C (32°F to 120°F).

R. Immunity to power and noise.
   1. Controller shall be able to operate at 90% to 110% of nominal voltage rating and shall perform an orderly shutdown below 80% nominal voltage.
   2. Operation shall be protected against electrical noise of 5 to 120 Hz and from keyed radios up to 5 W at 1 m (3 ft).
   3. Isolation shall be provided at all primary network terminations, as well as all field point terminations to suppress induced voltage transients consistent with:
      a. RF-Conducted Immunity (RFCI) per ENV 50141 (IEC 1000-4-6) at 3V.
      b. Electro Static Discharge (ESD) Immunity per EN 61000-4-2 (IEC 1000-4-2) at 8 kV air discharge, 4 kV contact.
      c. Electrical Fast Transient (EFT) per EN 61000-4-4 (IEC 1000-4-4) at 500V signal, 1 kV power.
      d. Output Circuit Transients per UL 864 (2,400V, 10A, 1.2 Joule max).
   4. Isolation shall be provided at all Building Controller's AC input terminals to suppress induced voltage transients consistent with:
      a. IEEE Standard 587 1980.
      b. UL 864 Supply Line Transients.
      c. Voltage Sags, Surge, and Dropout per EN 61000-4-11 (EN 1000-4-11).

S. Provide a separate DDC Controller for each HVAC system as indicated on the drawings and in the input/output summary, Section 1.15. It is intended that each unique system be provided with its own point resident DDC Controller.

2.07 APPLICATION SPECIFIC CONTROLLERS (ASC)

A. Each Application Level Control Panel shall operate as a stand-alone controller capable of performing its user selectable control routines independently of any other controller in the system. Each application specific controller shall be a microprocessor-based, multi-tasking, real-time digital control processor.

B. Each DDC Controller shall be able to extend its performance and capacity through the use of remote application specific controllers (ASCs).

C. The Application Controller Software shall be capable of BACnet communications. The BACnet Advanced Application Controller (B-AAC) shall have demonstrated compliance to BTL through BTL listing and shall substantially conform to BACnet Advanced Application Controller (B-AAC) device profile as specified in ANSI/ASHRAE 135-2004 or ANSI/ASHRAE 135-2008. Each ASC shall operate as a stand-alone controller capable of performing its specified control responsibilities independently of other controllers in the network.

D. Communication:
   1. BAS Network: The Advanced Application Controller shall support the following Data Link Layers.
      a. BACnet MS/TP Master or slave.
      b. Modbus.
      c. BACnet IP (On dedicated BMS sub-network).

E. Provide an Application Specific Control Panel for each of the following types of equipment (if applicable):
   1. Fan coil Units.
   2. Supplemental AC units.
   3. Other terminal equipment.

F. Terminal Equipment Controllers (VAV Controllers):
   1. Provide for control of each piece of equipment, including, but not limited to, the following:
      a. DX equipment
   2. Controllers shall include all point inputs and outputs necessary to perform the specified control sequences. As a minimum, 50% of the point outputs (except for unit ventilator controllers) shall be of the Universal type; that is, the outputs may be utilized either as modulating or two-state, allowing for additional system flexibility. In lieu of Universal outputs, provide a minimum of 50% spare outputs of each type via additional point termination boards or controllers. Analog outputs to field devices shall be either 4 to 20 ma or 1 to 10 volt. Tri-state signals (floating control) shall not be acceptable. Terminal equipment controllers utilizing proprietary control signals and actuators shall not be acceptable. As an alternative, provide DDC Controllers or other ASCs with industry standard outputs for control of all terminal equipment.
   3. Each controller performing space temperature control shall be provided with a matching room temperature sensor. The sensor may be either RTD or thermistor type providing the following minimum performance requirements are met:
      a. Accuracy: ±1°F
      b. Operating Range: 0° to 115°F
      c. Set Point Adjustment Range: 55° to 95°F
      d. Set Point Modes

1) Independent Heating, Cooling,
2) Night Setback Heating, Night Setback Cooling

e. Calibration Adjustments: None required.
f. Installation: Up to 150 ft. from Controller.
g. Each room temperature sensor shall include a terminal jack integral to the sensor assembly. The terminal jack shall be used to connect a portable operator's terminal
   1) to control and monitor all hardware and software points associated with the controller. In lieu of an internal jack, provide a method for local communications to controller without the need for outside network or provide a separate terminal jack mounted on a stainless steel wall plate adjacent to the sensor to facilitate direct access to the controller via the terminal.
h. Each room sensor shall also include the following auxiliary devices:
   1) Setpoint Adjustment Dial.
   2) Temperature Indicator.
   3) Override Switch.
i. The setpoint adjustment dial shall allow for modification of the temperature by the occupant Setpoint adjustment may be locked out overridden or limited as to time or temperature through software by an authorized operator at the central workstation, DDC Controller, or via the portable operator's terminal. In lieu of an integral adjustment dial, provide a separate dial mounted on a stainless steel wall plate adjacent to the sensor to perform the specified functionality.
j. The temperature indicator shall be a digital readout and have the ability to indicate at minimum current temperature and temperature setpoint.
k. An override switch shall initiate override of the night setback mode to normal (day) operation when activated by the occupant. The override function may be locked out, overridden or limited as to the time through software by an authorized operator at the central workstation, DDC Controller or via the portable operator's terminal. In lieu of an integral switch, provide a separate momentary contact switch mounted on a stainless steel wall plate adjacent to the sensor to perform the specified functionality.

4. Each controller shall perform its primary control function independent of other DDC Controller LAN communication, or if LAN communication is interrupted. Reversion to a fail-safe mode of operation during LAN interruption is not acceptable. The controller shall receive its real-time data from the DDC Controller time clock to ensure LAN continuity. Each controller shall include algorithms incorporating proportional, integral and derivative (PID) gains for all applications. All PID gains and biases shall be field-adjustable by the user via terminals as specified herein. This functionality shall allow for tighter control of space conditions and shall facilitate optimal occupant comfort and energy savings. Controllers that incorporate proportional and integral (PI) control algorithms only shall not be acceptable.

5. Provide each terminal equipment controller with sufficient memory to accommodate point databases, operating programs, local alarming and local trending. All databases and programs shall be stored in non-volatile EEPROM, EPROM and PROM, or minimum of 72-hour battery backup shall be provided. The controllers shall be able to return to full normal operation without user intervention after a power failure of unlimited duration. Provide uninterruptible power supplies (UPSs) of sufficient capacities for all terminal controllers that do not meet this protection requirement. Operating programs shall be field-selectable for specific applications. In addition, specific applications may be modified to meet the user's exact control strategy requirements, allowing for additional system flexibility. Controllers that require factory changes of all applications are not acceptable.
6. Programming and/or configurations should be editable over the network from the standard thin or thick client software.

2.08 BUILDING SYSTEMS INTEGRATION

A. The BAS System shall establish a seamless interconnection with other building, electrical and/or mechanical subsystems that employ BACnet protocol (Chillers, Variable frequency drives, etc.). These systems shall be controlled, monitored and graphically programmed with the same Graphical Programming Language (GPL) used for all other control modules.

B. LIGHTING CONTROL SYSTEM INTEGRATION
   1. Where lighting controllers are to be integrated through a dry-contact, the relay should have hand/on/auto switch for local override
   2. Where lighting controllers are to be integrated through modbus/BACnet – the lighting control panel should be integrated into the control system and points should be available on the controls system.

2.09 CONTROL PANELS

A. Controllers in mechanical rooms shall be mounted in a minimum of NEMA 1 enclosures. Exterior controllers shall be mounted in a NEMA 4X Stainless Steel enclosure.

B. Mount on walls at an approved location or provide a free standing rack built of unistrut or hot dipped galvanized of sufficient strength to maintain rigidity.

C. Panels shall be constructed of 16 gauge, furniture-quality steel, or extruded-aluminum alloy, totally enclosed, with hinged doors and keyed lock and with ANSI 61 gray polyester-powder painted finish, UL listed. Provide common keying for all panels.

D. Provide power supplies for control voltage power.

E. Dedicate 1 power supply to the DDC controller. Other devices shall be on a separate power supply, unless the power for the control device is derived from the controller terminations.

F. Power supplies for controllers shall be a transformer with a fuse or circuit breaker. Power supplies for other devices can be plain transformers.

G. All power supplies for 24V low voltage wiring shall be class 2 rated and less than 100VA. If low voltage devices require more amps, then provide multiple power supplies. If a single device requires more amps, then provide a dedicated power supply in a separate enclosure and run a separate, non-class 2 conduit to the device.

H. Surge transient protection shall be incorporated in design of system to protect electrical components in all DDC Controllers and operator's workstations.

I. All devices in a panel shall be permanently mounted, including network switches, modems, media converters, etc.

J. Provide a pocket to hold documentation.

K. Wire management should be completed using covered, slotted wireway (Panduit) in the control panels. Panels should be sized to accommodate wireways and DIN rail mounted equipment as necessary. Wires should not be left hanging.

2.10 INPUT/OUTPUT SENSORS

A. Temperature:
   1. Unless otherwise stated in this specification temperature sensors to be platinum RTD type.
   2. Resistance tolerance at calibration point to be no more than 0.2% Calibration point 0 degrees F.
   3. Use insertion elements in ducts not affected by temperature stratification or smaller than one square meter. Use averaging elements where larger or prone to stratification, sensor length 18" to 25 ft as required.
   4. Insertion elements for liquids shall be brass or stainless steel with minimum insertion length of 2-1/2 inches.
   5. Room temperature sensors used with terminal equipment controllers to be either thermistor or RTD type with set-point adjustment, temperature indicator, terminal jack and over-ride switch. Refer to Terminal Equipment Controller Specification for detailed requirements.
   6. Provide outside air sensors with watertight inlet fitting, shielded from direct rays of sun.

B. Humidity Sensor:
   1. Duct type shall include a dew point probe with an adjustable/removable draft shield and a transmitter mounted to the sensor probe case.
   2. Outside Air type shall include a probe in a weather-proof housing and a transmitter for indoor mounting.
   3. Dew Point monitoring range -40 to +115 degrees F, dewpoint.
   4. Room Sensors: Range of 0-99 percent RH.
   5. Elements: Accurate within 5 percent over 20-95% RH range with linear output.
   6. Output signal 0-10V or 4-20MA DC.
   7. Accuracy at Calibration Point.
      a. Dewpoint Element ±1.1 degrees F, dewpoint.
      b. Dewpoint Sensor ± 1.5 degrees F, dewpoint.
   8. Voltage, probe heater - 120 Vac.
   9. Voltage, transmitter - 26 Vdc.

C. Equipment Operation Sensors:
   1. Status Inputs for Fans: Current sensitive relay with current transformers, adjustable and set to 175 percent of rated motor current.

2. Status Inputs for Pumps: Differential pressure switch piped across pump with adjustable pressure differential range of 8 to 60 psi and on the pump side from any check valve or triple duty valve.
3. Status Inputs where differential pressure sensing is impractical: Current sensitive relay with current transformers, adjustable and set to 175 percent of rated motor current.

D. Low Temperature Protection Thermostats:
1. Low temperature protection thermostats shall be the manual reset type and shall have sensing elements not less than 20 feet in length. The thermostat shall operate in response to the coldest temperature at other parts of the element. The element shall be properly supported to cover the entire duct width. Separate thermostats shall be provided for each 25 sq. ft. of coil face areas of fraction thereof.
2. Low temperature protection thermostats shall be installed such that freezestats do not trip during normal operation of the system.
3. Controls should be programmed such that freezestats do not trip during normal winter operation.
4. Controls should be programmed such that freezestats do not trip during smoke evacuation operation. This is usually accomplished by automatically opening the hot water valves on the hot water coils during operation of the smoke evacuation system.

2.11 DAMPERS

A. Dampers: AMCA-rated, opposed blade design; form frames from not less than 0.1084-inch (2.8-mm) galvanized steel with mounting holes for duct mounting; damper blades not less than 0.0635-inch (1.6-mm) galvanized steel, with maximum blade width of 8 inches (203 mm).
1. Blades secured to 1/2-inch (13-mm) diameter, zinc-plated axles keyed, hexagonal square or other shape solid shaft that has positive (no slip) engagement with the provided actuator. Provided with zinc-plated hardware, with nylon blade bearings, blade-linkage hardware of zinc-plated steel and brass. Ends sealed against spring-stainless-steel blade bearings. Thrust bearings at each end of every blade.
2. Operating Temperature Range: From -40 to 200 deg F (-40 to 93 deg C).
3. For standard applications as indicated, (as selected by manufacturer's sizing techniques) with optional closed-cell neoprene edging.
4. For low-leakage applications as indicated, provide parallel or opposed blade design (as selected by manufacturer's sizing techniques) with inflatable seal blade edging, or replaceable rubber seals, rated for leakage at less than 10 cfm/sq. ft. (51 L/s/sq. m) of damper area, at differential pressure of 4 inches wg (995 Pa) when damper is being held by torque of 50 inch-pounds (5.6 N x m); test in accordance with AMCA 500.
5. Dampers shall be provided with mechanical end switches independent of the actuator position sensor to indicate a positive open or closed position of the damper blade itself.
6. Parallel dampers only allowed for non-modulating (on/off) operation.
7. Damper/Actuator combination shall be capable of modulating at maximum static pressure rating.

2.12 VALVE AND DAMPER ACTUATORS

A. Basis of design: Belimo.

B. Electronic Direct-Coupled. Electronic direct-coupled actuation shall be provided.

C. Actuator Mounting. The actuator shall be direct-coupled over the shaft, enabling it to be mounted directly to the damper shaft. Where a shaft extension is required a manufactured option accessory shall be used. Field fabricated extensions and couplers will not be allowed. The actuator shall employ a V-bolt and toothed V-clamp fastening technique. Single point bolt or screw type fastener for circular valve and damper shafts is unacceptable.

D. Electronic Overload Sensing. The actuator shall have electronic overload or digital rotation sensing circuitry to prevent damage to the actuator throughout the entire rotation of the actuator. Mechanical end switches or magnetic clutch to deactivate the actuator at the end of rotation are not acceptable.

E. Power Failure/Safety Applications. For power failure/safety applications, an internal mechanical spring return mechanism shall be built into the actuator housing. Non-mechanical forms of fail-safe operation are not acceptable.

F. Spring Return Actuators. All spring return actuators shall be capable of both clockwise and counterclockwise spring return operation by simply changing the mounting orientation.

G. Proportional Actuators. Proportional actuators shall accept a 0 to 10VDC or 0 to 20mA control input and provide a 2 to 10VDC or 4 to 20mA operating range. An actuator capable of accepting a pulse width modulating control signal and providing full proportional operation of the damper is not acceptable.

H. 24 Volts (AC/DC) actuators. All 24VAC/DC actuators shall operate on Class 2 wiring and shall not require more than 20VA for AC or more than 8 watts for DC applications. Actuators operating on 120VAC power shall not require more than 20VA. Actuators operating on 230VAC shall not be acceptable.

I. Non-Spring Return Actuators. All non-spring return actuators shall have an external manual gear release to allow manual positioning of the damper when the actuator is not powered. Spring return actuators shall have a manual crank for this purpose.

J. Modulating Actuators. All modulating actuators shall have an external, built-in switch to allow reversing direction of rotation.

K. Conduit Fitting. Actuators shall be provided with a conduit fitting.

L. U.L. Listing. Actuators shall be Underwriters Laboratories Standard 873 listed.

M. Warranty. Actuators shall be designed for a minimum of 60,000 full stroke cycles at the actuator's rated torque and shall have a minimum 5-year manufacturer's warranty.

N. Actuators shall be selected utilizing no more than 80% of the cataloged torque rating.

O. Actuators shall be electronic, low voltage (24 VAC/VDC), NEMA 2 rated for all applications. Two- position may utilize 120 VAC actuators. Actuators shall have UL, CSA and ISO 9001 certification and approvals. Actuators shall have a minimum operating range of –22 to 122 F. Optional auxiliary switches shall be available if required by the sequence. Actuators shall be fully modulating/proportional, floating/tri-state, or two- position as required. Pulse width modulation is unacceptable. Actuators shall have visual position indicators. Proportional actuators shall be field programmable to operate in sequence with other devices without additional transducers. All actuators except two- position shall be capable of providing a constant rotation rate independent of the load. Actuators used on dampers or valves shall be designed to directly couple to a stem, shaft or ISO style-mounting pad. Damper actuators or damper actuators adapted for use with control valves shall utilize V-bolt toothed V-clamp shaft fastening technique. Single point, bolt, or single screw type shaft fastening techniques for circular or round damper or valve shafts is unacceptable.

P. Ganged actuators must allow for single point manual operation.

2.13 UTILITY METERING

A. Electrical Metering: Electrical demand shall be from installed electrical meter including all circuits indicated on the drawings. Meter to be supplied by controls contractor, installed by the electrical contractor, and configured by the controls contractor.
   1. Model: Dent Powerscout PS48 HD or Siemens MD-48HD with RoCoil CT's properly sized to fit application or engineer approved equal.
   2. The BAS shall record the following and have the ability to report it at daily, monthly and yearly intervals:
      a. Instantaneous kW demand with time and date (trended 15 min intervals).
      b. kWh with time and date totalized for:
         1) Day to Date.
         2) Previous Day.
         3) Month to Date.
         4) Previous Month.
         5) Year to Date.
         6) Previous Year.

B. Domestic Water Metering: Water usage in gallons per hour shall be monitored from pulsing dry contacts provided by installation of a contractor provided water meter. The DDC system shall be capable of measuring and scaling any pulse rate provided by the water meter. Provide meter with all installation hardware necessary to enable insertion and removal of meter without system shutdown. The flow meter shall be hand insertable up to 400 psi. Turbine rotation shall be detected by electronic impedance base sensing (non-magnetic).
   1. Model: The water meter shall be equal to Dwyer Model WNT Multi-Jet NSF Certified or engineer approved equal with scaled output (1 gallon per pulse) Meter to be supplied by controls contractor with any necessary plumbing accessories and installed by Plumbing contractor.
   2. Both flow and total volume should be interfaced from the meter. Totalization should be performed by the meter and not through calculations.
   3. The BAS shall record the following and have the ability to report it at daily, monthly and yearly intervals:
      a. Gallons used with time and date totalized for:

1) Day to Date.
2) Previous Day.
3) Month to Date.
4) Previous Month.
5) Year to Date.
6) Previous Year.

b. Instantaneous, gpm demand with time and date (trended 15 min intervals).

2.14 MISCELLANEOUS CONTROLS

A. The control manufacturer shall furnish all two-position relays, current transformers, NEMA rated enclosures, thermostats and all other controls necessary to meet the specifications and provide for a properly operating automatic control system. All control devices connected in line-voltage circuits shall be U.L. listed and of a type to meet the current and voltage requirements of the particular application.

B. If a device or piece of equipment is provided with the ability to communicate directly with the controls system through any form of communication protocol (such as BACnet or lon) and the device is indicated to be connected to the BAS the controls contractor shall integrate their controls to that device.

C. All low voltage communication and network wiring shall have orange jackets.

PART 3 - EXECUTION

3.01 EXAMINATION

A. Verify that conditioned power supply is available to control units and operator workstation. Verify that field end devices and wiring are installed before proceeding with installation.

3.02 INSTALLATION

A. Install equipment as indicated to comply with manufacturer's written instructions.

B. Install software in control units and operator workstation. Implement all features of programs to specified requirements and appropriate to sequence of operation.

C. The DDC control panel shall be mounted in the same mechanical room as the equipment being controlled, or an adjacent utility room. Exact locations shall be coordinated in the field with the owner and engineer.

D. Where Ethernet is used for building level communication, a dedicated switch should be located in a BMS enclosure with the other DDC control panels and be configured on a private sub-network separate from the Wake County network.

E. Multiple systems can be programmed on the same controller as long as they are in the same room. Systems on separate floors shall have separate controllers.

F. Remote sensors shall be wired to the control panel of the equipment it is controlling, not across the network.

G. Signals to remote motor control centers shall be hard wired to the control panel, not across the network.

H. Terminal units shall each have their own controller. Only exceptions are:

1. Groups of reheat coils.
2. Groups of exhaust fans.

I. Connect and configure equipment and software to achieve the sequence of operation specified.

J. Verify location of thermostats, humidistats, and other exposed control sensors with plans and room details before installation. Locate 60 inches (1524 mm) above floor.

K. Any required ethernet cable not already identified in the scope of the project shall be the responsibility of the vendor to coordinate and install.

L. Install damper actuators on outside of duct in warm areas, not where exposed to outdoor temperatures.

M. Install labels and nameplates to identify control components.

N. Install white vinyl label on each sensor/actuator indicating installation date of sensors/actuators (vinyl handheld label maker).

O. Wires shall be labeled at every final and intermediate termination. Labels should identify point, panel and equipment number.

P. Actuators with line voltage shall be fed from a circuit dedicated to actuators only for a single piece of equipment.

Q. Install electrical work in accordance with Division 26. Electrical material and installation shall be in accordance with appropriate requirements of Division 26.

R. Conduits for control wiring shall not exceed 40% fill.

S. Graphics should be completed and active prior to the commissioning process and prior to substantial completion.

T. Point Structuring and Naming:
   1. The intent of this Section is to require a consistent means of naming points across Wake County WAN. Configure the systems from the perspective of Wake County WAN, not solely the local Project. The following requirement establishes a standard for naming points and addressing Buildings, Networks, Devices, Instances, and the like. The convention is tailored towards Wake County WAN and as such, the interface shall always use this naming convention. BACnet systems shall also use this naming convention. For non-BACnet systems, the naming convention shall be implemented as much as practical, and any deviations from this naming convention shall be approved by Wake County.
   2. Each Network Controller shall have English language descriptors for all system points, variables, parameters etc. located and accessible from the NC memory. All point naming shall match between all system files and record documents.
   3. Point Summary Table: The term ‘Point’ is a generic description for the class of object represented by analog and binary inputs, outputs, and values. With each schematic, Network Integrator shall provide a Point Summary Table listing:
      a. Equipment type.
      b. Equipment number.
      c. Equipment code.
      d. Full point name (see Point Naming Convention paragraph).
      e. Point description.
      f. Object type.

g. Engineering units.
h. Network variable.

4. Additional fields for non- BACnet systems shall be appended to each row. Point Summary Table shall be provided in in electronic format (ODBC-compliant).
5. Point Summary Table shall also illustrate Network Variable Data Links.
6. The System Integrator shall coordinate with Wake County representative to compile and submit a proposed Point Summary Table for review (see point naming submittal) prior to any object programming or Project startup. Wake County shall grant approval of final point names to be verified through Commissioning by issuing the approved alarms to the System Integrator.
7. All points shall be identified per Wake County's point naming convention.
8. System Enable Points – Each AHU, hot water system, chilled water system should indicate a system enable point to allow for taking the unit offline manually.
9. Adjustable points – Temperature associated with a temperature reset, pressure reset, outdoor air lock out or other variable indicated as adjustable should be created as a point and be indicated on a graphic for adjustment.
10. All functional variables with in the code such as mode, Temperature Bands, Average Temperature, Cooling Loop Outputs and other points used within the programming should be created as virtual points for the purposes of troubleshooting.
11. Actuators should be programmed and displayed as 0% = closed and 100% = open.
12. Comment lines should be included in the code which is active on the controller. Comments should be complete enough to determine what is included within the code without reading the programming language.

U. Trend Point Naming. The naming convention for points shall be in plain English and separate the data using the underscore (_) and include the building number, building acronym, equipment, point and time interval or COV.
   1. Trend Name Examples:
      a. 232FVL_AHU01_SupplyAirTemp_15min
      b. 232FVL_Vav01_15_SpaceTemp
      c. 232_FVL_ChilledWater_ChillerEnable_COV
      d. 232FVL_HotWater_Boiler02_FireRate_15min
   2. Trends shall be as follows: Unless otherwise noted on the construction drawings, 15 minute interval trends should be set up for
      a. All points, physical and virtual associated with AHUs
      b. All points, physical and virtual associated with DX Systems
      c. Water Submeters – Total volume, year to date volume, flow rate
      d. Natural Gas Submeter – Total Volume, year to date Volume, flow rate
      e. Electrical Submeter – Circuit total power (kW), Circuit energy (kwh) total, Circuit energy (kWh) year to date

V. Alarm Setup: Unless otherwise noted on the construction drawings, alarm should be set up via hard wired points or other software-type alarms for a minimum of:
   1. Fire Alarm Active Alarm
   2. Dirty Filter Alarm
   3. High Limit Alarm
   4. Low Temp Alarm (Freezestat)

3.03 MANUFACTURER'S FIELD SERVICES

A. Prepare and start systems under provisions of Division 01.

B. Start-up and commission systems. Allow sufficient time for start-up and commissioning prior to placing control systems in permanent operation.

C. Provide service engineer to instruct Owner's representatives in operation of systems plant and equipment, for one 8 hour period.

3.04 SCHEDULING OF TRAINING SHALL BE COORDINATED WITH OWNER

A. Provide basic operator training for a minimum of 4 persons on sequence of operations data display, alarm and status descriptions, requesting data, execution of commands and request of logs. Include a minimum of (12) hour’s dedicated instructor time. Provide as-built documents and O & M manuals for each person. A portion of the instruction time shall be specifically dedicated to the building life safety systems. As built drawings on paper and cad. As built drawings shall have a link to them shown on the controls front-end.

B. Occupancy Adjustments: When requested within 12 months of date of Substantial Completion, provide on-site assistance in adjusting system to suit actual occupied conditions. Provide up to three (3) visits to Project during other than normal occupancy hours for this purpose.

3.05 COMMISSIONING

A. Manufacturer's Field Services: Provide the services of a factory-authorized service representative to start control systems. Shall be scheduled with owner. Test and adjust controls and safeties.

B. System Equipment: Upon completion of installation of each piece of equipment, field-inspect and mechanically and electrically test equipment for properfunction.

C. Field Materials: Upon completion of installation of each piece of equipment, field-inspect and mechanically and electrically test equipment for proper function.

D. Acceptance Testing. Upon completion of the installation, the Contractor shall start up the system and perform all necessary trending, scheduling calibration, testing, and debugging operations. The Contractor in the presence of the Owners’ representative shall perform an acceptance test. Acceptance test procedure to be submitted, for approval no later than 4 weeks prior to testing. Submission of test procedure shall imply that systems are complete, functional and that contractor has verified performance. Successful completion of acceptance testing shall be required prior to substantial completion.

E. Perform the following field tests and inspections and prepare test reports:
   1. Operational Test: After electrical circuitry has been energized, start units to confirm proper unit operation. Remove and replace malfunctioning units andretest.
   2. Test and adjust controls and safeties.
   3. Test calibration of controllers inputs, outputs, and sensors.
   4. Test each point through its full operating range to verify that safety and operating control set points are as required.
   5. Test each control loop to verify stable mode of operation and compliance with sequence of operation. Adjust PID actions.

6. Test each system for compliance with sequence of operation.
7. Test software and hardware interlocks.

F. DDC Verification:
1. Verify that instruments are installed before calibration, testing, and loop or leak checks.
2. Check instruments for proper location and accessibility.
3. Check instrument installation for direction of flow, elevation, orientation, insertion depth, and other applicable considerations.
4. Check instrument tubing for proper fittings, slope, material, and support.
5. Check installation of air supply for each instrument.
6. Check flow instruments. Inspect tag number and line and bore size, and verify that inlet side is identified and that meters are installed correctly.
7. Check pressure instruments, piping slope, installation of valve manifold, and self-contained pressure regulators.
8. Check temperature instruments and material and length of sensing elements.
9. Check control valves. Verify that they are in correct direction.
10. Check air-operated dampers. Verify that pressure gages are provided andthat proper blade alignment, either parallel or opposed, has beenprovided.
11. Check DDC system as follows:
    a. Verify that DDC controller power supply is from emergency power supply, if applicable.
    b. Verify that wires at control panels are tagged with their service designation and approved tagging system.
    c. Verify that spare I/O capacity has been provided.
    d. Verify that DDC controllers are protected from power supply surges.
12. Replace damaged or malfunctioning controls and equipment and repeattesting procedures.
13. Calibrating and Adjusting:
    a. Calibrate instruments.
    b. Make three-point calibration test for both linearity and accuracy for each analog instrument.
    c. Calibrate equipment and procedures using manufacturer's written recommendations and instruction manuals. Use test equipment with accuracy at least double that of instrument being calibrated.
    d. Control System Inputs and Outputs:
        1) Check analog inputs at 0, 50, and 100 percent of span.
        2) Check analog outputs using milliampere meter at 0, 50, and 100 percent output.
        3) Check digital inputs using jumper wire.
        4) Check digital outputs using ohmmeter to test for contact making orbreaking.
        5) Check resistance temperature inputs at 0, 50, and 100 percent of spanusing a precision-resistant source.
    e. Flow:
        1) Calibrate the input sensors to the specified accuracy.
        2) Manually operate flow switches to verify that they make or breakcontact.
    f. Temperature:
        1) Calibrate the input sensors to the specified accuracy.
        2) Calibrate temperature switches to make or break contacts.

g. Stroke and adjust control valves and dampers without positioners, following the manufacturer's recommended procedure, so that valve or damper is 100 percent open and closed.
   1) Stroke and adjust control valves and dampers with positioners, following manufacturer's recommended procedure, so that valve and damper is 0, 50, and 100 percent closed.
   2) Provide diagnostic and test instruments for calibration and adjustment of system.
   3) Provide written description of procedures and equipment for calibrating each type of instrument. Submit procedures review and approval before initiating startup procedures. Document all tests and provide to Wake County.

h. Adjust initial temperature and humidity set points.

i. Occupancy Adjustments: When requested within 12 months of date of Substantial Completion, provide on-site assistance in adjusting system to suit actual occupied conditions. Provide up to three (3) visits to Project during other than normal occupancy hours for this purpose.

G. Replace damaged or malfunctioning controls and equipment.

H. Start, test, and adjust control systems.

I. Demonstrate compliance with requirements.

J. Adjust, calibrate, and fine tune circuits and equipment to achieve the sequence of operation specified without fault or failure.

3.06 DEMONSTRATION

A. Demonstrate a complete and fully operational system to Owner as required by contract documents near completion of project.

3.07 GRAPHICS

A. See Graphic standards.

B. Contractor shall submit graphics via a submittal and correct any deficiencies prior to project acceptance

C. Contractor shall allow four (4) hours of additional graphic design/modify time to adjust, develop, modify, and install the graphics after the DDC controls are installed and operational. The owner will provide marked up graphics illustrating the work.

PART 4 - GRAPHICS AND POINT NAMING

4.01 COORDINATION

A. Graphics should be developed and submitted to the County via a project submittal.

B. Graphics should be completed and active prior to the commissioning process.

4.02 GRAPHIC GUIDELINES

A. Standard units of measure should be used and labeled as follows:

Value	Unit
Temperature	°F

Water Flow	gpm
Air Flow	CFM
Relative Humidity	%RH
Water Differential Pressure	psi
Gas Volume	CCF
Gas Flow	CFH
Enthalpy	BTU/lb/F
Carbon Dioxide	ppm
Static Pressure	"WC
Filter Differential Pressure	"WC
Power	kW
Electrical Energy	kWh

B. Setpoints – should be located beneath each point controlled to a set point. Points in override shall have a visual indication they have been overridden.

C. System Enable Points – Each AHU, hot water system, chilled water system should indicate a system enable point to allow for taking the unit offline manually.

D. Adjustable points – Temperature associated with a temperature reset, pressure reset, outdoor air lock out or other variable indicated as adjustable should be created as a point and be indicated on a graphic for adjustment.

E. Actuators/Damper/Valves should be programmed and displayed as 0% = closed and 100% = open.

F. Control and monitoring points of equipment should be located beneath the item being controlled.

4.03 GRAPHIC EXAMPLES

A. To the extent technically possible all graphics shall be based upon the examples shown below. All features of the graphics, such as title block, navigation buttons, etc., shall always be located in the same general area on each Graphic.

B. Navigation – Buildings should be organized in a navigation tree and include the three-digit building identification number.

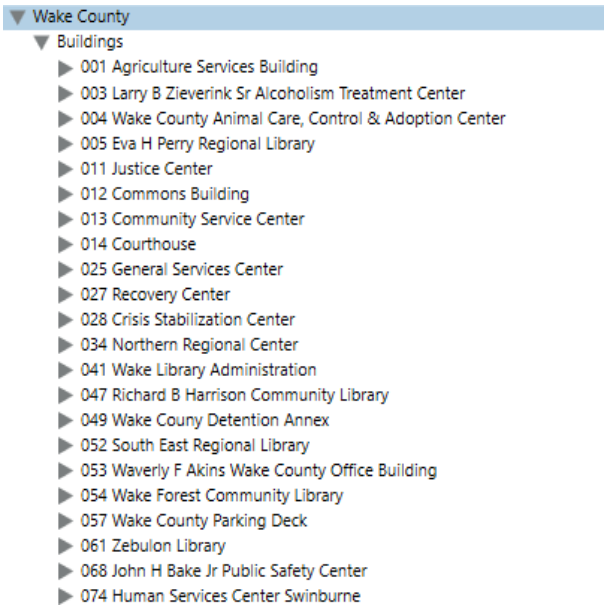

Figure 1: Navigation Tree, Example 1

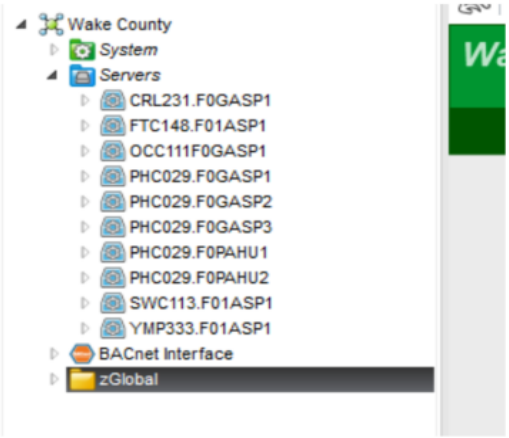

Figure 2: Navigation Tree, Example 2

C. Navigation – A top navigation bar should include site-specific graphics for the main mechanical and control systems, and the outdoor conditions for that site.



Figure 3: Navigation Bar, Example 1

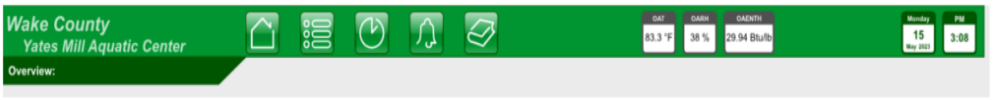

Figure 4: Navigation Bar, Example 2

D. Building Home Page – A building-specific home page should be created to provide an overview of the main systems status. The home page should include the navigation bar, building photo, and readings for the main systems such as AHU supply temperatures, hot water and chiller water supply temperatures and average building temperature

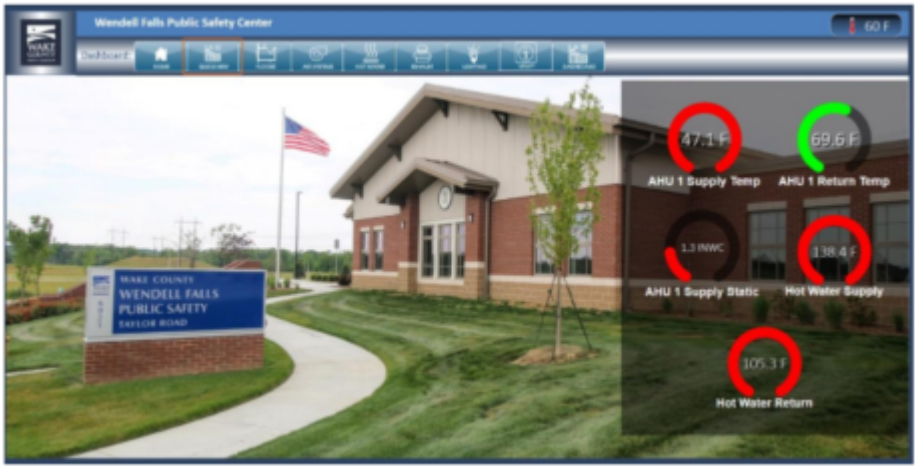

Figure 5: Building Home Page, Example 1



Figure 6: Building Home Page, Example 2

E. Floor Navigation – A floor plan should be created from the architectural floor plans and include inside walls, doorways and room numbers. Duct work shall include colored main duct as well as diffusers - one color per AHU. A legend should indicate AHU number and color. VAV boxes should be indicated and the zone ductwork and zone should be identifiable. Main equipment should be indicated and labeled. Ductwork should be a layer that can be toggled on/off. Floor color per zone that can be toggled on/off is preffered, but optional.

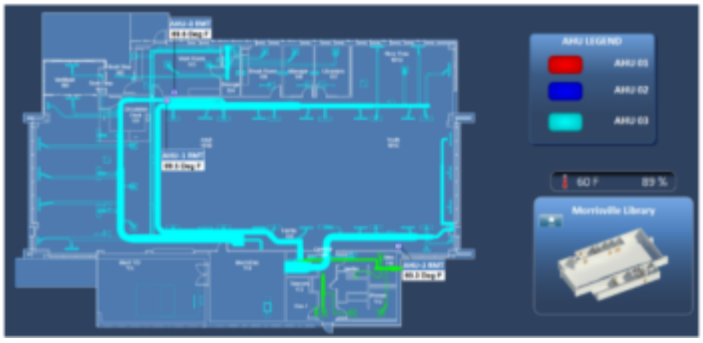

Figure 9: Floor Navigation - Example 1

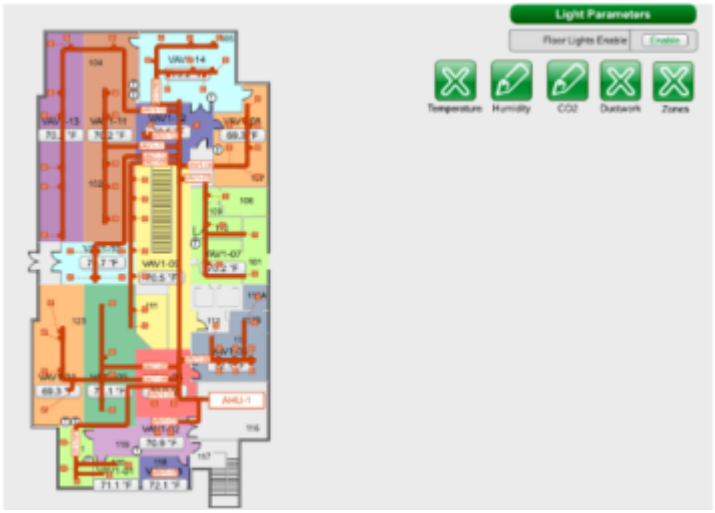

Figure 10: Floor Navigation - Example 2

F. Power meters – Pertinent values for each power meter should be displayed in a table. The table should display at minimum phase voltage, total power, and total energy for each channel measured. Where multiple circuits are metered within a building, one-line riser or tree shall display the kW and kWh of each circuit with descriptions of each circuit displayed.
   1. Figure 21: Power Meter Graphic Example
   2. Figure 22: Power Meter - Riser/Tree Example

4.04 WAKE COUNTY GSA BMS NAMING CONVENTION

A. All physical and virtual points as well as equipment should follow the point naming convention. Both name and description should be completed to allow for quick identification of point, location and purpose. Where possible, points should be case sensitive to follow the naming convention.

B. Single Equipment Points

Example:
BACnet Name: 149ERL.01.AHU01.SAFanEnbl
BACnet Description: 149ERL – AHU01 Supply Fan Enable
Where: 149 = Building Number; ERL = Building Acronym;
01 = Floor Number
AHU = Equipment Type; See Table 01 = Equipment Number

SAFan = Component;
Enbl = Measurement/Control

C. Terminal Box / VAV Points

Examples:
BACnet Name: 149ERL.02.AHU02.TBP15.FanEnbl
BACnet Description:149ERL – Terminal Box 15 – Fan Enable
Where: 149 = Building Number; see key
ERL = Building Acronym; see key
02 = Floor Number
AHU02 = Air Handler Number
TBP = Terminal Box: Parallel
15 = Terminal Box Number
FanEnbl = Measurement/Control (TEC fan control)
BACnet Name: 149ERL.03.AHU01.VAV08.DmprCtl
BACnet Description:149ERL – VAV08 – Damper Control
Where: 149 = Building Number; see key
ERL = Building Acronym; see key
03 = Floor Number
AHU01 = Air Handler Number
VAV = VAV Box
08 = VAV Box Number
DmprCtl = Measurement/Control (TEC Damper control)

D. Building floor level designations for BMS points:

PD	Pod
DM	Dorm
0B	Basement
0G	Ground
0M	Main
1	First
MA	Mezzanine
2	Second
3	Third
4	Fourth
5	Fifth
6	Sixth
7	Seventh
8	Eighth
9	Ninth
10	Tenth
11	Eleventh and so on

E. Acronyms for Equipment Type:

Equipment Type	**Equipment Description**
AHU	Air Handling Unit
Blr	Boiler

Equipment Type	Equipment Description
Dmpr	Damper
CU	Condensing Unit
Chem	Chemical Feeder
Chlr	Chiller
CT	Cooling Tower
DctHtr	Duct Heater, Electric
Fire Door	Fire Door
Gen	Emergency Generator
Evap	Evaportor Coil
DX	Direct Expansion Cooling Circuit
ExFan	Exhaust Fan
EXH	Exhaust Hood
ExtLgt	Exterior Lighting
IntLgt	Interior Lighting
FACP	Fire Alarm Panel
FCU	Fan Coil Unit
FDmpr	Fire Damper
HP	Heat Pump
HX	Heat Exchanger
HVAC	Heating Vent. / Ac System
SumpLvl	Sump Level Sensor
Pmp	Pump
StairFan	Stair Pressurization Fan
PRV	Pressure Reducing Valve
RAFan	Return Air Fan
RTU	RoofTop Unit
SAFan	Supply Air Fan
SmkDmpr	Smoke Damper
SumpPump	Sump Pump
FPBP	Fan Powered Box/Terminal Box (Parallel)
FPBS	Fan Powered Box/Terminal Box (Series)
Tnk	Tank
ATS	Automatic Transfer Switch
UH	Unit Heater
UPS	Uniterrubtable Power Supply
VAV	VAV Box
VFD	Variable Frequency Drive
PTAC	Wall A/C
WH	Water Heater
Smk	Smoke Detector

F. Acronyms for Components & Measurement/Control

Component Name	Component Description
Econ	Economizer
CO2	Carbon Dioxide
CdW	Condenser Water
Dhlr	Chiller
ChW	Chilled Water
ChWS	Chilled Water System
Coil	Coil
SA	Supply Air
RA	Return Air
MA	Mixed Air
EA	Exhaust Air
OA	Outside Air
Pht	Preheat
S	Supply (Water)
R	Return (Water)
DX	DX Cooling Stage
CT	Cooling Tower
CoolCoil	Cooling Coil
EOL	End of Line
FrzStat	Freezestat
Flm	Flame
Fltr	Filter
Gas	Natural Gas
Elec	Elect
Heat	Heating
Vib	Vibration
IsoValv	Isolation Valve
MkUp	Make Up (Water)
HeatCoil	Heating Coil
Hum	Humidity
HW	Hot Water
HWS	Hot Water System
Rht	Reheat
Rm	Room
Spc	Space
Stm	Steam
Smk	Smoke
LPStm	Low Pressure Steam
Cap	Capactiy
Tmp	Temperature

Component Name	Component Description
SP	Setpoint
TmpSP	Temperature Setpoint
STmp	Supply Temp
RTmp	Return Temp
STmpST	Supply Temp Setpoint
Enbl	Enable
Stat	Statur
Alm	Alarm
Amp	Amps
Flow	Air/Water Flow
RFlow	Return Flow
SFlow	Supply Flow
PosFdBck	PositionFeedback
Ctl	Control Signal
OnSP	On Setpoint
Req	System Request/Enable (AHU/Chilled Water system/Hot Water System)
DP	Differential Pressure
Enth	Enthalpy
FireRate	Boiler Flame Control
DewPt	Dew Point
Prs	Pressure
Spd	Speed - Control
SpdFdBck	Speed - Feedback From VFD
Hi	High Speed
Lo	Low Speed
StaticPrs	Static Pressure
StaticPrsSP	Static Pressure Setpoint
kW	Kilowatts
kWh	Kilowatt Hours

G. Acronyms for Subcomponents

Component Name	Component Description
Vlv	Valve
Byp	Bypass
Pmp	Pump
Dmpr	Damper
Dmd	Demand
Fan	Fan
Dehum	Dehumification Equipment/Sequence
EndSwitch	End Switch

Lo	Low
Hi	High
Pre	Pre (before)
Pwr	Power

H. Combined Examples of Components, Subcomponents and Measurement/Control

ChWVlv	Chiller Water Valve
ChWRFlow	Chiller Water Return Flow
ChWRTmp	Chilled Water Return Temp
ChWSPump	Chiller Water Supply Pump
ChWSTmp	Chilled Water Supply Temp
ChWSTmpSP	Chiller Water Supply Temp Setpoint
CTBypVlv	Cooling Tower Bypass Valve
CoolCoilTmp	Cooling Coil Temperature
DmprCtl	Damper Control
DmprPosFdBck	Damper Position Feedback
EconDmpr	Economizer Damper
EOLPrs	End of Line Pressure
FltrStat	Filter DP (Clean/Dirty) Status
FltrDP	Filter DP (Measurement)
GasFlow	Natural Gas Flow Rate
CTVibAlm	Cooling Tower Vibration Alarm
PreFltrDP	Pre Filter Differential Pressure
MkUpVlv	Make Up Water Valve
HiLvlAlm	High Level Alarm
SAHiTmpAlm	Supply Air High Temperature Alarm
LPStmVlv	Low Pressure Steam Valve
HiStatPrsAlm	High Static Pressure Alarm
OATmp	Outside Air Temp

I. Table of Example Point Names

Point	Building Numer	Building Acronym	Floor	BACnet Name	BACnet Description
Chilled Water System - System Request/Enable/OnOff	076	ORL	1	076ORL.01.ChWS.SysReq	076ORL - Chilled Water System Request
Chilled Water System - Demand (tons)	076	ORL	1	076ORL.01.ChWS.SysDemand	076ORL - Chilled Water System Demand (tons)
Chilled Water System - Available Running Chiller Capacity	076	ORL	1	076ORL.01.ChWS.SysCap	076ORL - Chilled Water System Capacity (tons)

Chilled Water System - Chilled Water Pump 1 - Enable/OnOff	076	ORL	1	076ORL.01.ChWS.ChWPmp1Enbl	076ORL - Chilled Water Pump 1 - Enable
Chilled Water System - Chilled Water Pump 1 - Status	076	ORL	1	076ORL.01.ChWS.ChWPmp1Stat	076ORL - Chilled Water Pump 1 - Status
Chilled Water System - Chilled Water Pump 1 - Speed	076	ORL	1	076ORL.01.ChWS.ChWPmp1Spd	076ORL - Chilled Water Pump 1 - Speed
Chilled Water System - Chilled Water Pump 1 - Alarm	076	ORL	1	076ORL.01.ChWS.ChWPmp1Alm	076ORL - Chilled Water Pump 1 - Alarm
Chilled Water System - Chilled Water Pump 1 - Flow Meter on Pump	076	ORL	1	076ORL.01.ChWS.ChWPmp1Flow	076ORL - Chilled Water Pump 1 - Flow Meter on Pump
Chilled Water System - Secondary Chilled Water Pump 2 - Enable/OnOff *Others named in similar manor	076	ORL	1	076ORL.01.ChWS.ChWPmp2Enbl	076ORL - Secondary Chilled Water Pump 2 - Enable
Chilled Water System - Secondary Loop Differential Pressure	076	ORL	1	076ORL.01.ChWS.SecDP	076ORL - Chilled Water Secondary Loop Differential Pressure
Chilled Water System - Secondary Loop Differential Pressure - Setpoint	076	ORL	1	076ORL.01.ChWS.SecDPSP	076ORL - Chilled Water Secondary Loop Differential Pressure - Setpoint
Chilled Water System - Secondary Loop Supply Temperature	076	ORL	1	076ORL.01.ChWS.SecSTmp	076ORL - Chilled Water Secondary Loop Supply Temperature
Chilled Water System - Secondary Loop Return	076	ORL	1	076ORL.01.ChWS.SecRTmp	076ORL - Chilled Water Secondary

Temperature					Loop Return Temperature
Chilled Water System - Chiller 1 - Enable/Request	076	ORL	1	076ORL.01.ChWS.Chlr1Enbl	076ORL - Chiller 1 - Enable
Chilled Water System - Chiller 1 - Status	076	ORL	1	076ORL.01.ChWS.Chlr1Stat	076ORL - Chiller 1 - Status
Chilled Water System - Chiller 1 - Isolation Valve - Command	076	ORL	1	076ORL.01.ChWS.Chlr1IsoVlv	076ORL - Chiller 1 - Isolation Valve - Command
Chilled Water System - Chiller 1 - Isolation Valve - Status	076	ORL	1	076ORL.01.ChWS.Chlr1IsoVlvStat	076ORL - Chiller 1 - Isolation Valve - Status
Chilled Water System - Chiller 1 - Alarm	076	ORL	1	076ORL.01.ChWS.Chlr1Alm	076ORL - Chiller 1 - Alarm
Chilled Water System - Chiller 1 - Condenser Water Flow	076	ORL	1	076ORL.01.ChWS.Chlr1CondFlow	076ORL - Chiller 1 - Condenser Water Flow
Chilled Water System - Chiller 1 - Chilled Water Supply Temperature	076	ORL	1	076ORL.01.ChWS.Chlr1ChWSTmp	076ORL - Chiller 1 - Chilled Water Supply Temperature
Chilled Water System - Chiller 1 - Chilled Water Supply Temp Setpoint	076	ORL	1	076ORL.01.ChWS.Chlr1ChWSTmpSP	076ORL - Water Water
Chilled Water System - Chiller 1 - Chilled Water Return Temperature	076	ORL	1	076ORL.01.ChWS.Chlr1ChWRTmp	076ORL - Chiller 1 - Chilled Water Return Temperature
Chilled Water System - Chiller 1 - Condenser Water Supply Temperature	076	ORL	1	076ORL.01.ChWS.Chlr1CdWSTmp	076ORL - Chiller 1 - Condenser Water Supply Temperature

Chilled Water System - Chiller 1 - Condenser Water Return Temperature	076	ORL	1	076ORL.01.ChWS.Chlr1CdWRTmp	076ORL - Chiller 1 - Condenser Water Return Temperature
Chilled Water System - Chiller 1 - Amps	076	ORL	1	076ORL.01.ChWS.Chlr1Amp	076ORL - Chiller 1 - Amps
Chilled Water System - Chiller 1 - Capacity	076	ORL	1	076ORL.01.ChWS.Chlr1Cap	076ORL - Chiller 1 - Capacity
Chilled Water System - Condenser Water System Return Temperature (to Cooling Towers)	076	ORL	1	076ORL.01.ChWS.CdWRTmp	076ORL - System Condenser Water Return Temperature
Chilled Water System - Condenser Water System Supply Temperature (from Cooling Tower)	076	ORL	1	076ORL.01.ChWS.CdWSTmp	076ORL - System Condenser Water Supply Temperature
Chilled Water System - Condenser Water Pump 1 - Enable/OnOff	076	ORL	1	076ORL.01.ChWS.CdWPmp1Enbl	076ORL - Condenser Water Pump 1 - Enable
Chilled Water System - Condenser Water Pump 1 - Status	076	ORL	1	076ORL.01.ChWS.CdWPmp1Stat	076ORL - Condenser Water Pump 1 - Status
Chilled Water System - Condenser Water Pump 1 - Alarm	076	ORL	1	076ORL.01.ChWS.CdWPmp1Alm	076ORL - Condenser Water Pump 1 - Alarm
Chilled Water System - Cooling Tower 1 - Enable	076	ORL	1	076ORL.01.ChWS.CTwr1Enbl	076ORL - Cooling Tower 1 - Enable
Chilled Water System - Cooling Tower 1 - Status	076	ORL	1	076ORL.01.ChWS.CTwr1Stat	076ORL - Cooling Tower 1 - Status

Chilled Water System - Cooling Tower 1 - Alarm	076	ORL	1	076ORL.01.ChWS.CTwr1Alm	076ORL - Cooling Tower 1 - Alarm
Chilled Water System - Cooling Tower 1 - Isolation Valve Command	076	ORL	1	076ORL.01.ChWS.CTwr1IsoVlv	076ORL - Cooling Tower 1 - Isolation Valve Command
Chilled Water System - Cooling Tower 1 - Isolation Valve Status	076	ORL	1	076ORL.01.ChWS.CTwr1IsoVlvStat	076ORL - Cooling Tower 1 - Isolation Valve Status
Chilled Water System - Cooling Tower 1 - Fan Enable (Low Speed)	076	ORL	1	076ORL.01.ChWS.CTwr1FanLo	076ORL - Cooling Tower 1 - Fan Enable Low Speed
Chilled Water System - Cooling Tower 1 - Fan Enable (High Speed)	076	ORL	1	076ORL.01.ChWS.CTwr1FanHi	076ORL - Cooling Tower 1 - Fan Enable High Speed

Program Points - Examples

AIR HANDLING UNIT 1 - SYSTEM ENABLE	076	ORL	1	076ORL.01.AHU01.MODE	076ORL - AHU01 - SYSTEM ENABLE
AIR HANDLING UNIT 1 - DEHUMIFICATION MODE	076	ORL	1	076ORL.01.AHU01.DEHUMENBL	076ORL - AHU01 - DEHUM MODE
AIR HANDLING UNIT 1 - CO2 LOOP INTEGRAL GAIN	076	ORL	1	076ORL.01.AHU01.CO2LOOPIG	076ORL - AHU01 - CO2 LOOP INTEGRAL GAIN
AIR HANDLING UNIT 1 - CO2 LOOP PROPORTIONAL GAIN	076	ORL	1	076ORL.01.AHU01.CO2LOOPPG	076ORL - AHU01 - CO2 LOOP PROPORTIONAL GAIN
AIR HANDLING UNIT 1 - DX MINIMUM OFF TIME (OFF DELAY)	076	ORL	1	076ORL.01.AHU01.DX1OFFDLY	076ORL - AHU01 - DX MIN OFF TIME
AIR HANDLING UNIT 1 - DX MINIMUM ON TIME (ON	076	ORL	1	076ORL.01.AHU01.DX1ONDLY	076ORL - AHU01 - DX MIN ON TIME

DELAY)					
AIR HANDLING UNIT 1 - DX RUNTIME TIMER	076	ORL	1	076ORL.01.AHU01.DX1ONTMR	076ORL - AHU01 - DX RUNTIME TIMER
AIR HANDLING UNIT 1 - SUPPLY AIR TEMP RESET - MIN SUPPLY AIR TEMP	076	ORL	1	076ORL.01.AHU01.SARESETSATMPMIN	076ORL - AHU01 - SATMP RESET - MIN SUPPLY AIR TEMP
AIR HANDLING UNIT 1 - SUPPLY AIR TEMP RESET - MAX SUPPLY AIR TEMP	076	ORL	1	076ORL.01.AHU01.SARESETSATMPMAX	076ORL - AHU01 - SATMP RESET - MAX SUPPLY AIR TEMP
AIR HANDLING UNIT 1 - SUPPLY AIR TEMP RESET - MIN OUTDOOR AIR TEMP	076	ORL	1	076ORL.01.AHU01.SARESETOATMPMIN	076ORL - AHU01 - SATMP RESET - MIN OUTDOOR AIR TEMP
AIR HANDLING UNIT 1 - SUPPLY AIR TEMP RESET - MAX OUTDOOR AIR TEMP	076	ORL	1	076ORL.01.AHU01.SARESETOATMPMAX	076ORL - AHU01 - SATMP RESET - MAX OUTDOOR AIR TEMP
HOT WATER SYSTEM SYSTEM - BOILER 1 - SUPPLY TEMPERATURE RESET - MIN SUPPLY WATER TEMP	076	ORL	1	076ORL.01.HWS.BLR1RESETSTMPMIN	076ORL - HWS - BLR1 - TEMP RESET - MIN SUPPLY TEMP
HOT WATER SYSTEM SYSTEM - BOILER 1 - SUPPLY TEMPERATURE RESET - MAX SUPPLY WATER TEMP	076	ORL	1	076ORL.01.HWS.BLR1RESETSTMPMAX	076ORL - HWS - BLR1 - TEMP RESET - MAX SUPPLY TEMP
HOT WATER SYSTEM SYSTEM - BOILER 1 - SUPPLY	076	ORL	1	076ORL.01.HWS.BLR1RESETOATMPMIN	076ORL - HWS - BLR1 - TEMP RESET - MIN OATEMP

TEMPERATURE RESET - MIN OUTDOOR AIR TEMP					
HOT WATER SYSTEM SYSTEM - BOILER 1 - SUPPLY TEMPERATURE RESET - MAX OUTDOOR AIR TEMP	076	ORL	1	076ORL.01.HWS.BLR1RESETOATMPMAX	076ORL - HWS - BLR1 - TEMP RESET - MAX OATEMP

A. Controller Device Name

Equipment named after primary control purpose. Where multiple systems are served, the controller model can be referenced. BACnet Descriptions must be assigned.

Example:
BACnet Name: 149ERL.01.AHU01
BACnet Description:149ERL – AHU 1 Controller
Where: 149 = Building Number;
ERL = Building Acronym;
01 = Floor Number
AHU = Primary Equipment Served
01 = Equipment Number

Example: Variable Frequency Drive
BACnet Name: 149ERL.01.AHU01.SAFan_VFD
BACnet Description:149ERL – AHU1 Supply Fan VFD

BACnet Name:076ORL.01.ChWS.CdWPmp_VFD
BACnet Description:076ORL – Chilled Water System Cond. Pump VFD

Example: VAV
BACnet Name: 149ERL.01.AHU01.VAV08

Example: Controlling two AHUs
BACnet Name: 149ERL.01.AHU01_AHU02

Example: Controlling Multiple Systems:
Example: Schneider ASP
BACnet Name: 149ERL.01.ASP01

Example: Siemens PXCM
BACnet Name: 149ERL.01.PXCM01

Example: JACE
BACnet Name: 149ERL.01.JACE01

Example: Terminal Box
Equipment Name: 149ERL.02.TBP15
Where: 149 = Building Number; see key
ERL = Building Identifier; see key
02 = Floor Number

TBP = Terminal Box: Parallel
15 = Terminal Box Number

B. Wake County GSA BMS BACnet Instance Naming Convention
1. BACnet Instance Numbers 1 to 4194302 (7 digits)

XXXXXXX – BACnet Instance Number, where:
XXX - Three Digit Building Number
XX - Field Panel Controller (11-99 w/ 00 reserved for the server1
XX - Device MAC address (00-99 w/ 00 reserved for the Field Panel Controller)2
1 Examples include Network Controllers, AHU controller, Chiller Plant Controller, etc.
2 Equipment connected or associated with the controller. Example: VAV controllers, VFDs, Chiller BACnet connection, etc.

Example: First AHU (or Network Level Controller) in Building 156
Point Name: 1561100
Where: 156 = Three Digit Building Number
11 = Field Panel Controller (11-99 w/ 00 reserved for the server)
00 = Device MAC address (00-99 w/ 00 reserved for the Field Panel Controller)

Example: Second AHU in Building 156
Point Name: 1561200
Where: 156 = Three Digit Building Number
12 = Field Panel Controller (11-99 w/ 00 reserved for the server)
00 = Device MAC address (00-99 w/ 00 reserved for the Field Panel Controller)

Example: First VAV associated with the Second AHU controller in Building 156
Point Name: 1561201
Where: 156 = Three Digit Building Number
12 = Field Panel Controller (11-99 w/ 00 reserved for the server)
01 = Device MAC address (00-99 w/ 00 reserved for the Field Panel Controller)

WAKE COUNTY – BUILDING NAME AND NUMBER SUBMITTAL

CONTROLS CONTRACTOR			**GSA**
BUILDING NAME			
BUILDING NUMBER			

COUNTY OF WAKE
LAKE MYRA COUNTY PARK PHASE 1

WAKE COUNTY BACNET INSTANCE NUMBER SUBMITTAL

CONTROLS CONTRACTOR			**GRAPHICS CONTRACTOR**
BUILDING NAME			
BUILDING NUMBER			

DEVICE DESCRIPTION	**DEVICE MODEL**	**BACNET NAME**	**BACNET DESCRIPTION**		**BACNET INSTANCE NUMBER**
EXAMPLE: AHU1 CONTROLLER	PXCM	149ERL.01.AHU01	149ERL – AHU 1		1491100
EXAMPLE: VAV1 SERVED BY AHU1	DXR	149ERL.01.AHU01.VAV01	149ERL – AHU1 – VAV1		1491101

END OF SECTION 230900 23 09 00

SECTION 23 81 26.13 - SMALL-CAPACITY SPLIT-SYSTEM AIR CONDITIONERS

PART 1 GENERAL

1.01 SECTION INCLUDES

A. Air-source heat pumps.

B. Air cooled condensing units.

C. Indoor air handling (fan and coil) units for ducted systems.

D. Indoor air handling (fan and coil) units for ductless systems.

E. Controls.

F. Section 26 05 83 - Wiring Connections: Electrical characteristics and wiring connections and installation and wiring of thermostats and other controls components.

1.02 REFERENCE STANDARDS

A. AHRI 210/240 - Performance Rating of Unitary Air-Conditioning and Air-Source Heat Pump Equipment; 2026.

B. AHRI 520 - Performance Rating of Positive Displacement Condensing Units; 2004.

C. ASHRAE Std 15 - Safety Standard for Refrigeration Systems; 2024, with Addendum (2026).

D. ASHRAE Std 23 - Methods for Performance Testing Positive Displacement Refrigerant Compressors and Compressor Units; 2022.

E. NEMA MG 00001 - Motors and Generators; 2024.

F. NFPA 90A - Standard for the Installation of Air-Conditioning and Ventilating Systems; 2027.

G. NFPA 90B - Standard for the Installation of Warm Air Heating and Air-Conditioning Systems; 2027.

H. UL 207 - Standard for Refrigerant-Containing Components and Accessories, Nonelectrical; Current Edition, Including All Revisions.

1.03 SUBMITTALS

A. See Section 01 30 00 - Administrative Requirements, for submittal procedures.

B. Product Data: Provide rated capacities, weights, accessories, electrical nameplate data, and wiring diagrams. Provide A2L refrigerant system documentation.

C. Shop Drawings: Indicate assembly, required clearances, and location and size of field connections.

D. Design Data: Indicate refrigerant pipe sizing.

E. Warranty: Submit manufacturers warranty and ensure forms have been filled out in Owner's name and registered with manufacturer.

1.04 QUALITY ASSURANCE

A. Manufacturer Qualifications: Company specializing in manufacturing the type of products specified in this section, with minimum three years of documented experience.

1.05 WARRANTY

A. See Section 01 78 00 - Closeout Submittals, for additional warranty requirements.

B. Provide five year manufacturers warranty for compressors

PART 2 PRODUCTS

2.01 SYSTEM DESIGN

A. Split-System Heating and Cooling Units: Self-contained, packaged, matched factory-engineered and assembled, pre-wired indoor and outdoor units; UL listed.
   1. Heating and Cooling: Air-source electric heat pump located in outdoor unit with evaporator; auxiliary electric heat.
   2. Provide refrigerant lines internal to units and between indoor and outdoor units, factory cleaned, dried, pressurized and sealed, with insulated suction line.
   3. Equipment utilizing A2L (lower flammability) refrigerant (R-454B, R-32, or approved equivalent) shall be provided with a complete, factory-installed, factory-tested, and factory-wired Refrigerant Detection System (RDS) fully integrated into the indoor unit assembly per UL 60335-2-40. Field-installed or loose-ship detection kits are not acceptable.

B. Performance Requirements: See Drawings for additional requirements.

C. Electrical Characteristics:
   1. Disconnect Switch: Factory mount disconnect switch on equipment under provisions of Section 26 05 83.

2.02 INDOOR AIR HANDLING UNITS FOR DUCTED SYSTEMS

A. Manufacturers:
   1. Carrier Corporation: www.carrier.com/#sle.
   2. Trane Technologies, PLC: www.trane.com/#sle.
   3. York International Corporation / Johnson Controls: www.york.com/#sle.
   4. Mitsubishi Electric Corporation.

B. Indoor Units: Self-contained, packaged, factory assembled, pre-wired unit consisting of cabinet, supply fan, heating and cooling element(s), controls, and accessories; wired for single power connection with control transformer.
   1. Air Flow Configuration: Upflow.
   2. Cabinet: Steel with baked enamel finish, easily removed and secured access doors with safety interlock switches, glass fiber insulation with reflective liner.

C. Supply Fan: Centrifugal type rubber mounted with direct or belt drive with adjustable variable pitch motor pulley.
   1. Motor: NEMA MG 1; 1750 rpm single speed, permanently lubricated, hinge mounted.
   2. Motor Electrical Characteristics:

D. Air Filters: 1 inch thick glass fiber, disposable type arranged for easy replacement.

E. Evaporator Coils: Copper tube aluminum fin assembly, galvanized or polymer drain pan sloped in all directions to drain, drain connection, refrigerant piping connections, restricted distributor or thermostatic expansion valve.
   1. Construction and Ratings: In accordance with AHRI 210/240 and UL 207.
   2. Manufacturers: System manufacturer.

F. A2L Refrigerant Detection System (RDS)
   1. Leak Sensor: Factory-mounted inside the evaporator/fan coil cabinet in the air stream downstream of the coil assembly or in the drain pan cavity where leaking refrigerant accumulates.
      a. Sensor technology shall be Non-Dispersive Infrared (NDIR) or Molecular Property Spectrometer (MPS) rated for the specific A2L refrigerant charge.
      b. Sensing threshold shall trigger within 30 seconds of reaching 25% of the Lower Flammability Limit (LFL) per UL/ASHRAE criteria.
      c. Sensor shall feature automated self-diagnostics and end-of-life fault reporting.
   2. Dissipation Control Board: Factory-installed microprocessor-based control board dedicated to monitoring the leak sensor state and managing safety mitigation functions.
      a. Mitigation Control Sequence (Factory Programmed): Upon detection of refrigerant concentration at or exceeding 25% LFL:
         1) Immediate shutdown of the outdoor compressor and liquid line solenoid/expansion valves.
         2) Continuous operation of the indoor blower fan (at high speed) to dilute refrigerant vapor concentration below allowable concentration limits.
         3) Energize dry-contact output terminal to transmit a leak fault signal to the building automation system (BAS) or local remote alarm annunciator.
      b. Manual Reset: Mitigation controls shall lock out the system until manually reset following leak repair and sensor clearing.
      c. Power Supply: The indoor unit control circuit shall continuously supply power to the leak sensor even when the unit is powered "OFF" via local hand-held remote controller or wall thermostat, provided main line power is active.
      d. Power Interruption/Failure Mode: In the event of sensor fault or wire disruption, the control board shall default to a fault alert state and initiate mitigation ventilation.

2.03 INDOOR AIR HANDLING UNITS FOR DUCTLESS SYSTEMS

A. Manufacturers:
   1. Carrier.
   2. Daikin
   3. Fujitsu
   4. LG
   5. Mitsubishi
   6. Samsung
   7. Trane
   8. Or Approved Equal

B. Indoor Units: Self-contained, packaged, factory assembled, pre-wired unit consisting of cabinet, supply fan, evaporator coil, and controls; wired for single power connection with control transformer.

C. Evaporator Coils: Copper tube aluminum fin assembly, galvanized or polymer drain pan sloped in all directions to drain, drain connection, refrigerant piping connections, restricted distributor or thermostatic expansion valve.
   1. Construction and Ratings: In accordance with AHRI 210/240 and UL 207.
   2. Manufacturer: System manufacturer.

D. Integrated A2L Refrigerant Detection System (RDS)
   1. Factory Integration: Each ductless indoor unit shall be supplied with a fully factory-installed, factory-wired, and factory-tested A2L Refrigerant Detection System (RDS) and internal mitigation logic board complying with UL 60335-2-40 (4th Edition or later). External or field-mounted mitigation control enclosures are strictly prohibited for ductless indoor units.
   2. Sensor Location & Construction:
      a. The leak sensor shall be factory-mounted within the lower portion of the indoor unit chassis assembly, positioned in the immediate path of gravity flow near the evaporator coil end-bends and condensation drain pan.
      b. Sensor shall be factory-calibrated Non-Dispersive Infrared (NDIR) or Molecular Property Spectrometer (MPS) type, impervious to common room household vapors and aerosols, with a minimum 15-year operational service life requiring no field re-zeroing.
   3. Mitigation Control Sequence (Ductless Specific): Upon detection of refrigerant concentration at or exceeding 25% LFL:
      a. Immediate shutdown of the outdoor compressor and liquid line solenoid/expansion valves.
      b. Automatically drive all motorized airflow louvers, directional vanes, and cassette sweep dampers to the 100% fully open position to maximize free discharge area.
      c. Override thermostat controls and force the indoor cross-flow or centrifugal fan to run continuously at maximum high speed to circulate and dilute refrigerant throughout the room volume.
      d. Visual/Audible Indication: Flash the unit's front panel LED status/fault light indicator in an error code pattern and activate an integral audible alert beep (if supported by unit model).
      e. Auxiliary Output: Energize dry-contact terminals to transmit a leak fault signal to the Building Automation System (BAS).
      f. Power Supply: The indoor unit control circuit shall continuously supply power to the leak sensor even when the unit is powered "OFF" via local hand-held remote controller or wall thermostat, provided main line power is active.
      g. Power Interruption/Failure Mode: In the event of sensor fault or wire disruption, the control board shall default to a fault alert state and initiate mitigation ventilation.

2.04 OUTDOOR UNITS

A. Outdoor Units: Self-contained, packaged, pre-wired unit consisting of cabinet, with compressor and condenser.
   1. Comply with AHRI 210/240.
   2. Refrigerant: R-454B or _____.
   3. Cabinet: Galvanized steel with baked enamel finish, easily removed and secured access doors with safety interlock switches, glass fiber insulation with reflective liner.

4. Construction and Ratings: In accordance with AHRI 210/240 with testing in accordance with ASHRAE Std 23 and UL 207.

B. Compressor: Hermetic, two speed 1800 and 3600 rpm, AHRI 520 resiliently mounted integral with condenser, with positive lubrication, crankcase heater, high-pressure control, motor overload protection, service valves and drier. Provide time delay control to prevent short cycling and rapid speed changes.

C. Air Cooled Condenser: Aluminum fin and copper tube coil, AHRI 520 with direct drive axial propeller fan resiliently mounted, galvanized fan guard.
1. Condenser Fans: Direct-drive propeller type.
2. Airflow orientation: Horizontal. Front discharge, rear intake.

D. Coil: Air-cooled, aluminum fins bonded to copper tubes.

E. Accessories: Filter drier, high-pressure switch (manual reset), low pressure switch (automatic reset), service valves and gauge ports, thermometer well (in liquid line).
1. Provide thermostatic expansion valves.
2. Provide heat pump reversing valves.

F. Operating Controls:
1. Control by room thermostat to maintain room temperature setting.
2. Low Ambient Kit: Provide refrigerant pressure switch to cycle condenser fan on when condenser refrigerant pressure is above 285 psig and off when pressure drops below 140 psig for operation to 0 degrees F.

2.05 ACCESSORY EQUIPMENT

A. Room Thermostat: Wall-mounted, electric solid state microcomputer based room thermostat with remote sensor to maintain temperature setting; low-voltage; with following features:
1. System selector switch (heat-off-cool) and fan control switch (auto-on).
2. Automatic switching from heating to cooling.
3. Preferential rate control to minimize overshoot and deviation from setpoint.
4. Set-up for four separate temperatures per day.
5. Instant override of setpoint for continuous or timed period from one hour to 31 days.
6. Short cycle protection.
7. Programming based on weekdays, Saturday and Sunday.
8. Selection features including degree F or degree C display, 12 or 24 hour clock, keyboard disable, remote sensor, fan on-auto.
9. Battery replacement without program loss.
10. Thermostat Display:
    a. Time of day.
    b. Actual room temperature.
    c. Programmed temperature.
    d. Programmed time.
    e. Duration of timed override.
    f. Day of week.
    g. System Mode Indication: Heating, Cooling, Fan Auto, Off, and On, Auto or On, Off.

PART 3 EXECUTION

3.01 EXAMINATION

A. Verify that substrates are ready for installation of units and openings are as indicated on shop drawings.

B. Verify that proper power supply is available and in correct location.

C. Verify that proper fuel supply is available for connection.

3.02 INSTALLATION

A. Install in accordance with NFPA 90A and NFPA 90B.

B. Install refrigeration systems in accordance with ASHRAE Std 15.

C. Pipe drain from cooling coils to nearest floor drain or building exterior as shown on the Drawings.

3.03 OWNER TRAINING

A. Location: Job site

B. An authorized manufacturer's representative shall conduct the training session.

C. Provide minimum four (4) hours training for six (6) people.

D. Provide video recording of the training session. Turn over video to Owner at the conclusion of the project

END OF SECTION 23 81 26.13

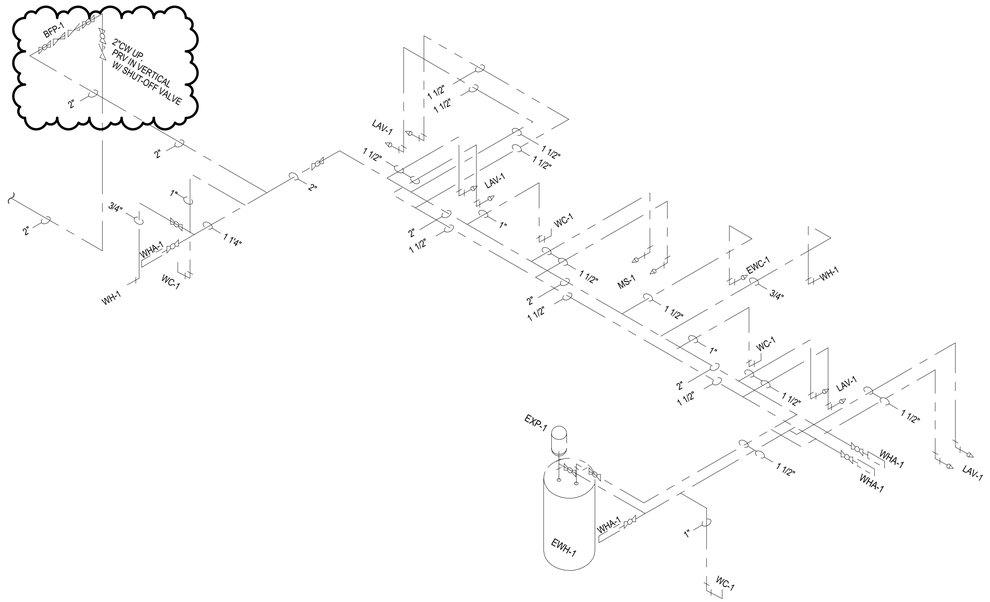

4 ES-P101 WATER SUPPLY RISER DIAGRAM
NOT TO SCALE

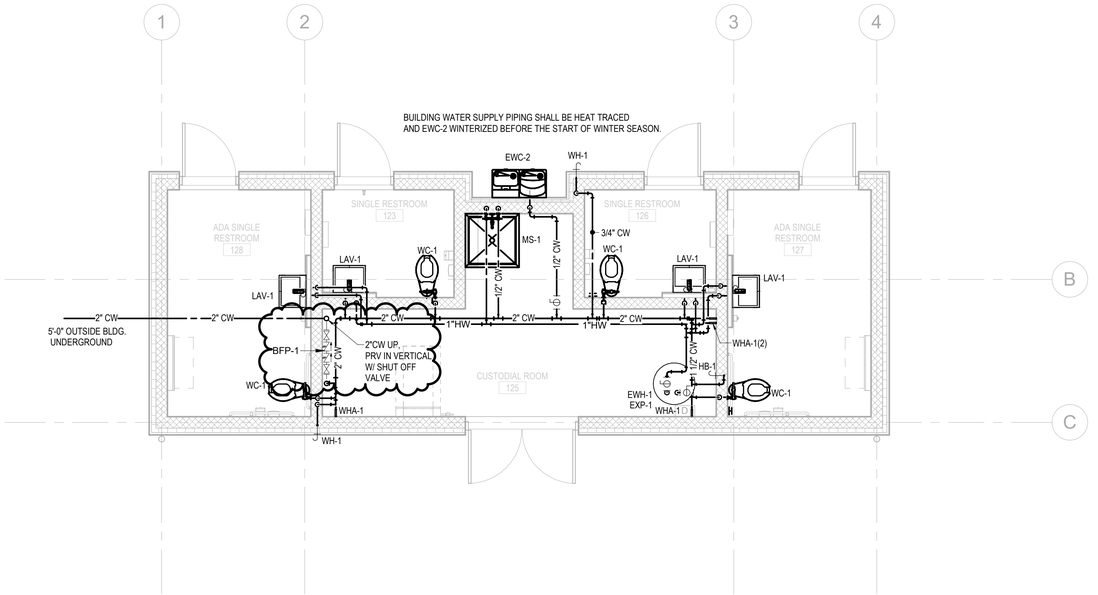

2 ES-P101 DOMESTIC WATER PLAN
1/4" = 1'-0"

3 ES-P101 WASTE AND VENT RISER DIAGRAM
NOT TO SCALE

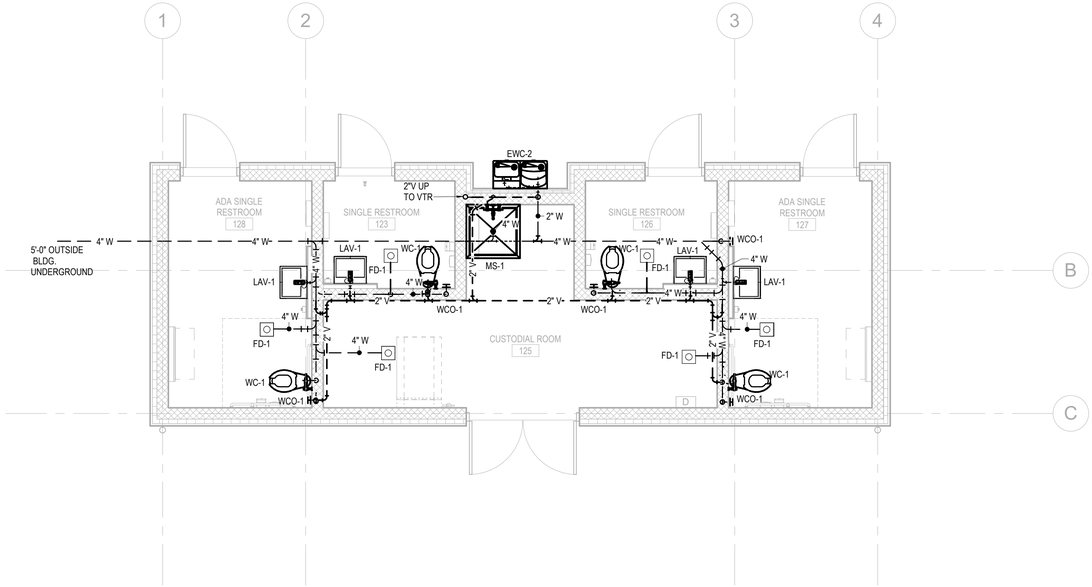

1 ES-P101 DWV PIPING PLAN
1/4" = 1'-0"

Susan Hatchell
Landscape Architecture, PLLC
711 W. North Street, Raleigh, NC 27603
p: 919-838-9600 f: 919-838-9700

Wooten
120 North Boylan Avenue • Raleigh, NC 27603-1423
(919) 828-6531 • thewootencompany.com
License Number : F-0115

FLOOR PLANS

NORTH CAROLINA PROFESSIONAL ENGINEER SCOTT L. ENNIS
Docu Signed by: 9/29/2026
Date: 9/29/2026

LAKE MYRA COUNTY PARK
Wake County, NC

REVISIONS

2	09.29.26	Addendum 3

Date: 07/27/26

ES-P101

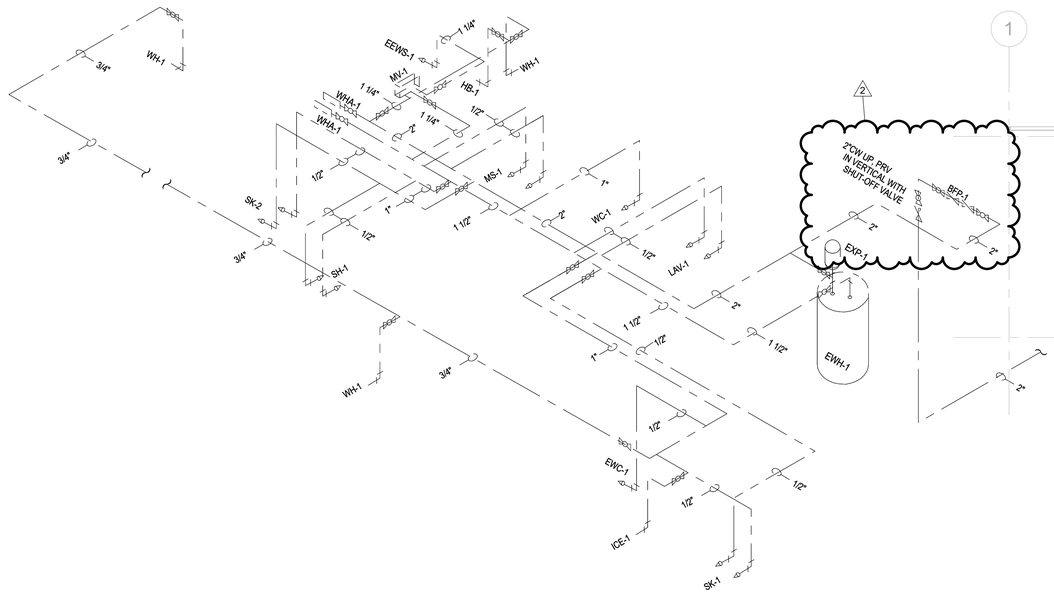

4 MF-P105 MF - WATER SUPPLY RISER DIAGRAM
NOT TO SCALE

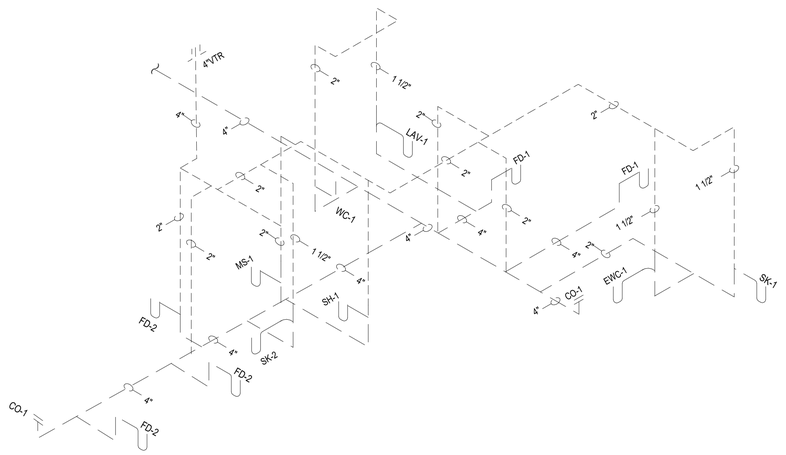

3 MF-P105 MF - WASTE AND VENT RISER DIAGRAM
NOT TO SCALE

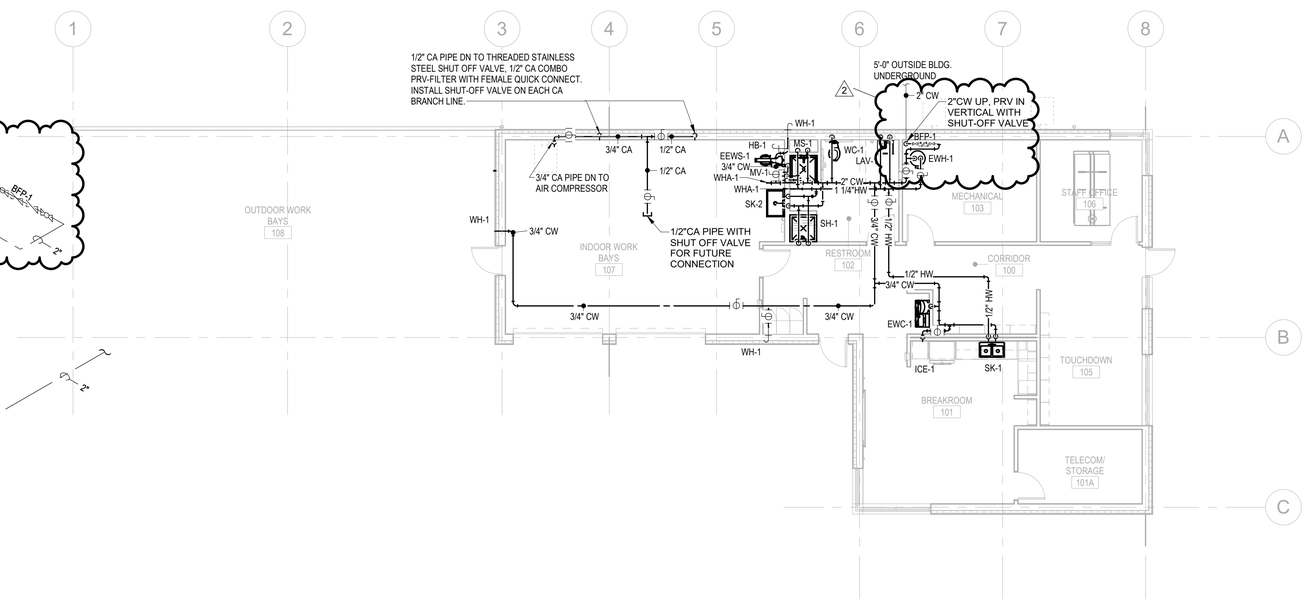

2 MF-P105 DOMESTIC WATER PLAN
1/8" = 1'-0"

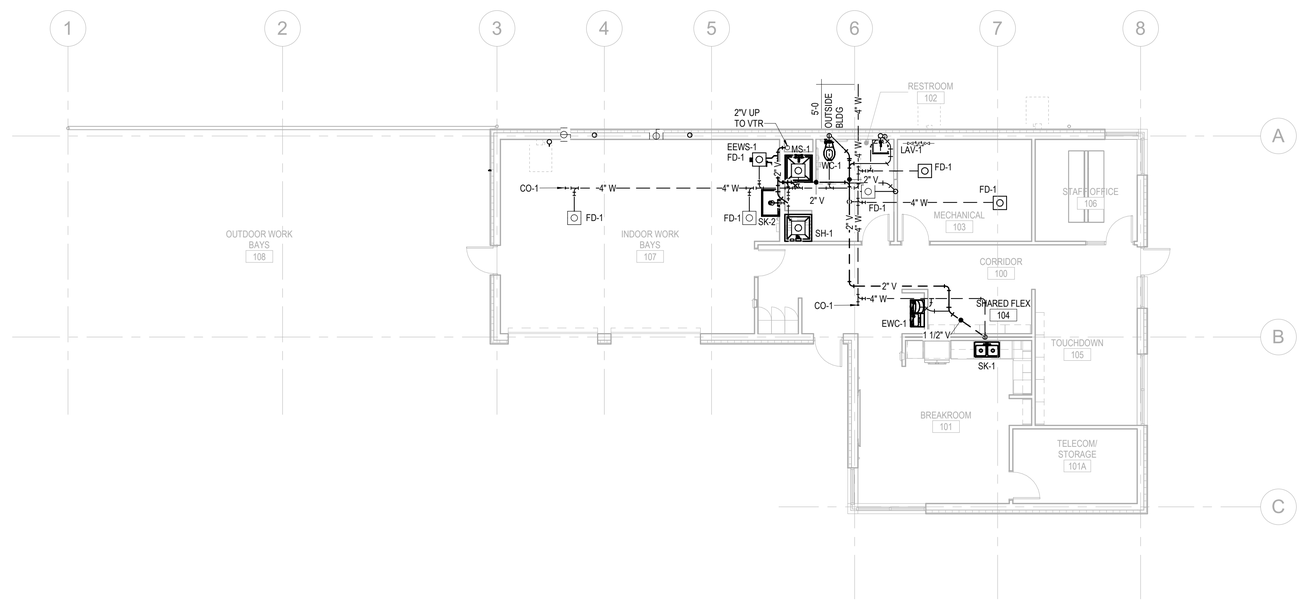

1 MF-P105 DWV PLAN
1/8" = 1'-0"

Susan Hatchell
Landscape Architecture, PLLC
711 W. North Street, Raleigh, NC 27603
p: 919-838-9600 f: 919-838-9700

Wooten
120 North Boylan Avenue • Raleigh, NC 27603-1423
(919) 828-0531 • thewootencompany.com
License Number : F-0115

FLOOR PLANS

NORTH CAROLINA PROFESSIONAL
Documents prepared by:
SCOTT L. ENNIS
ENGINEER
9/29/2026

LAKE MYRA COUNTY PARK
Wake County, NC

REVISIONS

2	09.29.26	Addendum 3

Date: 07/27/26

MF-P105

Maintenance Building Unit Heater Schedule

Identity	Manufacturer	Model	Heating Airflow Design		Electric Heat		Electrical		Product	Remarks
			Output	Airflow	Rating	Load	Voltage	Phase	Weight	
EUH-06	Markel	F1FUH03003	11,260 Btu/h	400 CFM	3.3 kW	15.9 A	208 V	1	36 lb	1, 2, 3, 4

GENERAL NOTES:

A. BASIS OF DESIGN IS MARKEL
B. EQUIVALENTS: REZNOR, BERKO, INDEECO OR AS LISTED IN SPECIFICATIONS.
C. MOUNTING HEIGHTS ARE TO BOTTOM OF UNIT.

REMARKS:

1. PROVIDE WALL-MOUNTED 24V THERMOSTAT.
2. PROVIDE HANGING BRACKET.
3. PROVIDE FACTORY MOUNTED DISCONNECT SWITCH.
4. BAS CONTRACTOR TO PROVIDE T-STAT.

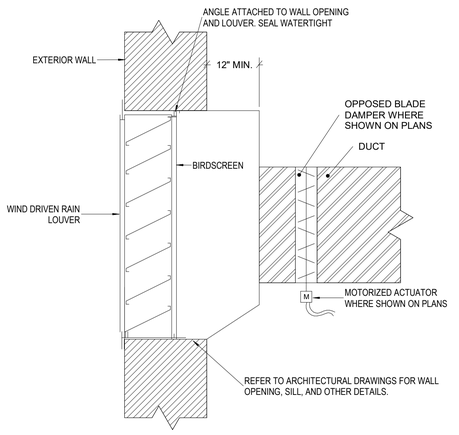

1 MF-M601 DETAIL - OUTSIDE AIR/EXHAUST LOUVER
NOT TO SCALE

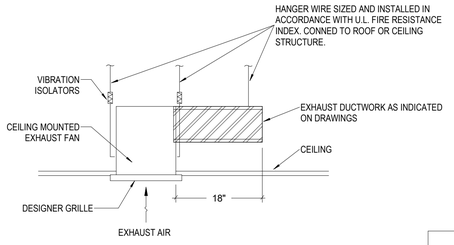

4 MF-M601 DETAIL - CEILING MOUNTED EXHAUST FAN
NOT TO SCALE

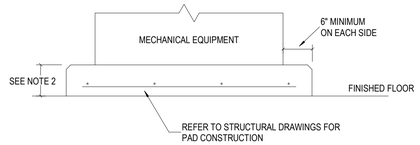

NOTES:

1. ACTUAL PAD SIZE TO BE DETERMINED BY CONTRACTOR, AFTER ALL EQUIPMENT HAS BEEN REVIEWED.
2. PAD SHALL BE 6" HIGH FOR BOILERS AND 4" HIGH FOR ALL AHU'S AND OTHER MECHANICAL EQUIPMENT.

5 MF-M601 DETAIL - MECHANICAL EQUIPMENT SUPPORT PAD
NOT TO SCALE

Maintenance Building Outdoor Split System Schedule

Identity	Manufacturer	Model	Nominal Tons	Rated Cooling Capacity	Rated Heating Capacity	Efficiency	Refrigerant Type	Refrigerant Charge	Electrical		MCA	MOCP	Product Weight	Remarks
									Voltage	Phase				
CU-01	Mitsubishi	PUZ-AK12NL-U1	1.0	12,000 Btu/h	19,000 Btu/h	20.0 SEER2, 9.8 HSPF2	R-454B	4.4 lbm	208 V	1	16.0 A	27.0 A	99 lb	
CU-02	Mitsubishi	PUZ-AK18NL-U1	1.5	18,000 Btu/h	23,000 Btu/h	18.6 SEER2, 8.6 HSPF2	R-454B	4.4 lbm	208 V	1	16.0 A	27.0 A	99 lb	

GENERAL NOTES:

1. PROVIDE NEOPRENE VIBRATION ISOLATION PADS AND CONCRETE HOUSEKEEPING PAD.
2. PERFORMANCE BASED ON 80 DB, 67 WB. AMBIENT 95 DB, 75 WB.
3. PROVIDE HAIL GUARDS FOR CONDENSER COILS.
4. REFRIGERANT LINE SIZES AS RECOMMENDED BY THE EQUIPMENT MANUFACTURER BASED ON HORIZONTAL AND VERTICAL RUNS.

Maintenance Building Indoor Split System Schedule

Identity	Manufacturer	Model	Product Type	Nominal Capacity	Design Airflow Rate	Outdoor Air Intake Flow	Supply Fan ESP	Aux Heat KW	Aux Heat MCA	Aux Heat MOCP	AHU Motor MCA	Electrical		Product Weight	Remarks
												Voltage	Phase		
AHU-1	Mitsubishi	PVA-AA12NL	Vertical	1.0 ton	240 CFM	45 CFM	0.60 in-wg	3.8	22.6 A	25 A	3.0 A	208 V	1	113 lb	1, 2, 3, 4
AHU-2	Mitsubishi	PVA-AA18NL	Vertical	1.5 ton	570 CFM	70 CFM	0.60 in-wg	3.8	22.6 A	25 A	3.0 A	208 V	1	113 lb	1, 2, 3, 4

GENERAL NOTES:

A. MAXIMUM COIL FACE VELOCITY OF 500 FPM. MAXIMUM FILTER FACE VELOCITY OF 300 FPM.
B. PROVIDE WITH A DOUBLE SLOPED STAINLESS STEEL DRAIN PAN UNDER ALL COIL SECTIONS. EXTEND PIPING TO FLOOR DRAIN.
C. ALL FANS SHALL BE INTERNALLY ISOLATED.
D. ALL UNITS SHALL HAVE AN FILTER SECTION WITH 2", MERV-8 FILTERS. PROVIDE ONE SET IN THE UNIT AND THREE EXTRA SETS. ONE EXTRA SET SHALL BE INSTALLED AFTER THE SYSTEM IS BALANCED AND THE BUILDING IS CLEAN. TWO FINAL SETS ARE FOR FUTURE. TURN OVER TO OWNER.
E. ALL AIR HANDLERS SHALL BE U.L. LISTED.
F. UNIT SHALL BE PROVIDED STANDARD WITH FACTORY INSTALLED DISSIPATION CONTROL BOARD AND LEAK SENSOR FOR A2L REFRIGERANT.

REMARKS:

1. PROVIDE UNIT WITH AUXILIARY ELECTRIC HEAT ACCESSORY KIT.
2. AIR HANDLING UNIT SHALL BE POWERED SEPARATELY FROM OUTDOOR UNIT. PROVIDE SEPARATE POWER KIT SPTB1.
3. HEATER SHALL BE POWERED SEPARATELY FROM AIR HANDLING UNIT.
4. PROVIDE AUXILIARY HEAT LOCKOUT ACCESSORY TO PREVENT ELECTRIC HEAT FROM OPERATING ABOVE PROGRAMMED SET OUTSIDE TEMPERATURE.

Maintenance Building Fan Schedule

Identity	Manufacturer	Model	Product Type	Fan Design				Fan Drive Type	Weight	Electrical		Remarks
				Capacity	TSP	bhp	RPM			Voltage	Phase	
EF-01	GREENHECK	SP-A125	Square Centrifugal	70 CFM	0.25 in-wg	0.01 hp	900	Direct	0 lb	115 V	1	1
EF-02	COOK	10XW28D17	Wall Propeller	200 CFM	0.10 in-wg	0.03 hp	1565	Direct	0 lb	115 V	1	

GENERAL NOTES:

A. PROVIDE ALL DUCT TRANSITIONS FOR FANS.
B. THE UNIT HOUSING SHALL BE CONSTRUCTED OF ALUMINUM.
C. ALL FANS TO BE U.L. LISTED.
D. PROVIDE WITH INTEGRAL DISCONNECT.
E. EXTERNALLY OR INTERNALLY MOUNTED DISCONNECT SWITCH FURNISHED BY DIVISION 23 AND INSTALLED BY DIVISION 26.
F. EXTERNALLY MOUNTED STARTER FURNISHED BY DIVISION 23 INSTALLED BY DIVISION 26.
G. PROVIDE OVERLOAD PROTECTION FOR ALL FANS, COORDINATE WITH DIVISION 26.
H. PROVIDE SPEED CONTROLLERS FOR ALL DIRECT DRIVE FANS.
I. ESP DOES NOT INCLUDE FACTORY BACKDRAFT DAMPER. THIS PRESSURE DROP SHALL BE ADDED BY THE MANUFACTURER TO THE ESP LISTED WHEN SELECTING FANS.

REMARKS:

1. PROVIDE HANGING VIBRATION ISOLATION KIT WITH NEOPRENE ISOLATORS.
2. FAN SHALL OPERATE CONTINUOUSLY DURING OCCUPIED HOURS. PROVIDE TIME CLOCK TO CONTROL FAN OPERATION. COORDINATE OPERATING HOURS WITH PARK STAFF.
3. PROVIDE DISCONNECT SWITCH, NEMA-1 INDOORS, NEMA 3R OUTDOORS, TOGGLE, MOUNTED AND WIRED.
4. SPARK-A RESISTANT CONSTRUCTION.
5. PROVIDE DISCONNECT SWITCH, OSHA MOTOR SIDE GUARD, WALL HOUSING, AND CAST ALUMINUM CONSTRUCTION.
6. PROVIDE CARBON MONOXIDE SENSOR FOR CONTROLLING FAN.
7. PROVIDE WITH REVERSE ACTING THERMOSTAT.

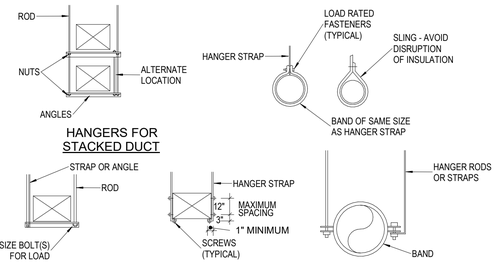

NOTES:

1. REINFORCEMENT MAY BE USED FOR ATTACHMENT IF IT QUALIFIES FOR BOTH DUTIES.
2. DO NOT EXCEED LOAD RATINGS FOR METHOD USED. FROM SMACNA DUCT STANDARDS

2 MF-M601 DETAIL - TYPICAL DUCT HANGERS
NOT TO SCALE

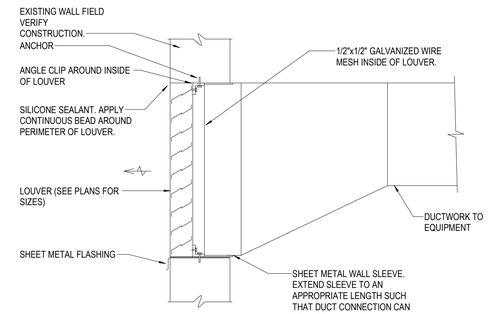

3 MF-M601 LOUVER ASSEMBLY DETAIL
NOT TO SCALE

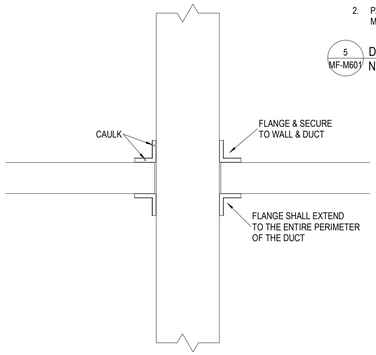

6 MF-M601 DETAIL - NON-RATED DUCT PENETRATION
NOT TO SCALE

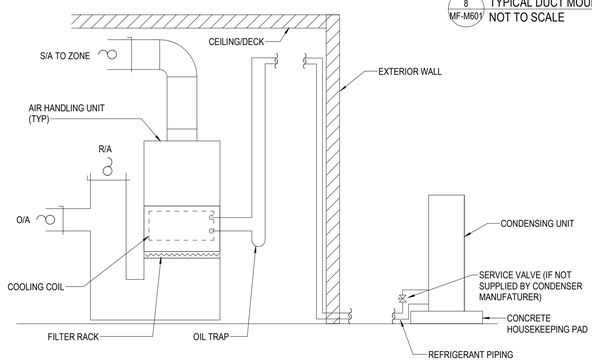

7 MF-M601 DETAIL - SPLIT SYSTEM INSTALLATION W/ VERTICAL AHU
NOT TO SCALE

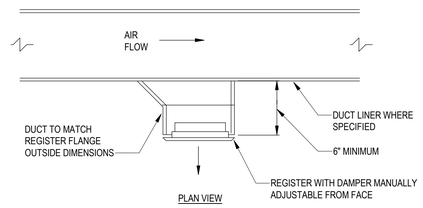

8 MF-M601 TYPICAL DUCT MOUNTED REGISTER (RECTANGULAR DUCT)
NOT TO SCALE

Maintenance Building Master Louver Schedule

Tag	Manf.	Model	Purpose	CFM	Size	Minimum Free Area (Sq.ft.)	Max FPM	Remarks
LV-01	GREENHECK	ESD-202	EXHAUST	70	8X8	0.1	900	1
LV-02	GREENHECK	ESD-435	EXHAUST	200	14X14	0.4	750	1
LV-03	GREENHECK	ESD-435	INTAKE	200	12X14	0.4	600	1
LV-04	GREENHECK	ESD-202	INTAKE	115	16X8	0.2	600	1

GENERAL NOTES:

A. PROVIDE FRAMED 1/2" x 1/2" ALUMINUM BIRD SCREEN FOR ALL LOUVERS
B. ALL LOUVERS SHALL BE RATED FOR THE PROJECT WIND ZONE. REFER TO STRUCTRAL DRAWINGS.
C. LOUVERS SHALL HAVE 3-COAT 70% PVDF FINISH (AAMA 2605) WITH A DRY FILM THICKNESS OF 2.0 mil MINIMUM. PROVIDE STANDARD AND CUSTOM COLOR CHARTS WITH SUBMITTAL. COLOR SHALL BE SELECTED BY ARCHITECT FROM THE FULL RANGE.
D. ALL LOUVERS SHALL BE AMCA 500-L CERTIFIED FOR AIR PERFORMANCE, WATER PENETRATION,, AND WIND DRIVEN RAIN AND BEAR APPROPRIATE SEAL. ALL LOUVERS SHALL BE RATED AS RAIN PENETRATION CLASS A FOR THE FACE VELOCITY AT THE CFM SCHEDULED.
E. EQUIVALENTS BY RUSKIN, ARROW, AIROLITE, NAILOR, RELIABLE, POTTORFF, OR AS LISTED IN THE SPECIFICATIONS

REMARKS:

1. PROVIDE MOTORIZED DAMPER TO OPEN WHEN ASSOCIATED FAN RUNS

Maintenance Building Grilles, Registers & Diffusers Schedule

ID Type	Service	Manf.	Model	Type	Border Application	Neck Size	Face Size	Remarks
A	Supply	PRICE	SCD	Square Cone	Lay-In Full Face	6"	24x24	1, 2, 3, 4
B	Supply	PRICE	SDGE	Spiral Grille	Duct Mount Frame		<varies>	1, 5
C	Supply	PRICE	SDGE	Spiral Grille	Duct Mount Frame		14X6	1, 5
D	Supply	PRICE	SCD	Square Cone	Surface Mount	6"	12x12	1, 2, 3, 4
T	Return Grille	PRICE	530	Sidewall	Surface Mount		10X10	1, 5, 7
V	Return Grille	PRICE	530	Sidewall	Surface Mount		16X14	1, 5, 7

GENERAL NOTES:

A. BASIS OF DESIGN IS PRICE. EQUIVALENTS BY TITUS, KRUEGER, TUTTLE AND BAILEY, NAILOR, OR AS LISTED IN SPECIFICATIONS
B. PROVIDE VOLUME DAMPERS AT TAKE-OFF FOR EACH GRILLE
C. ALL AIR DISTRIBUTION DEVICES SHALL BE ALUMINUM
D. THE PRICE MODELS SCHEDULED HERE ARE BASIS OF DESIGN, INCLUDING GENERATED NOISE. PROPOSED SUBSTITUTIONS WILL BE JUDGED BY THOSE CRITERIA ALSO
E. WHERE LOCATED IN HARD CEILINGS, PROVIDE ALUMINUM MOUNT FRAME/PLASTER FRAME FOR HARD CEILING THAT ALLOWS DIFFUSER/GRILLE WITH FLEX CONNECTION TO BE LIFTED OUT OF FRAME TO ACCESS CEILING SPACE. TYPICAL OF ALL HARD CEILING LOCATIONS. REFER TO ARCHITECTURAL REFLECTED CEILING PLAN
F. FOR SIDE WALL GRILLES, PROVIDE REMOTE CABLE OPERATED, GEAR DRIVEN BALANCING DAMPER OPERABLE FROM FACE OF DIFFUSER

REMARKS:

1. PROVIDE WITH WHITE ENAMEL FINISH. COLOR AND FINISH SELECTION SHALL BE REVIEWED AND APPROVED BY ARCHITECT.
2. PROVIDE WITH TRIM TO MATCH CEILING TYPE. REFER TO ARCHITECTURAL REFLECTED CEILING PLANS FOR CEILINGS
3. PROVIDE DIFFUSER/GRILLE WITH ROUND NECK OR PROVIDE SQUARE TO ROUND TRANSITION
4. ALL CEILING MOUNTED RETURN GRILLES SHALL BE FULL FACED. NO LAY-IN PANELS ALLOWED
5. PROVIDE OPPOSED BLADE ALUMINUM DAMPER
6. TRANSFER GRILLE. SIZE PER DUCT ON PLAN.
7. WHERE MOUNTED ON A WALL OR OTHER FINISHED ARCHITECTURAL SURFACE, PROVIDE CONCEALED MOUNTING BRACKET OPTION IN LIEU OF COUNTERSUNK SCREW TYPE.

Susan Hatchell
Landscape Architecture, PLLC
711 W. North Street, Raleigh, NC 27603
p: 919-838-9600 f: 919-838-9700

Wooten
120 North Boylan Avenue • Raleigh, NC 27603-1423
(919) 828-0531 • thewootencompany.com
License Number : F-0115

DETAILS & SCHEDULES

NORTH CAROLINA PROFESSIONAL
DocuSigned by:
SCOTT L ENNIS
027928
ENGINEER
9/29/2026

LAKE MYRA COUNTY PARK
Wake County, NC

REVISIONS

2	09.29.26	Addendum 3

Date: 07/27/26

MF-M601

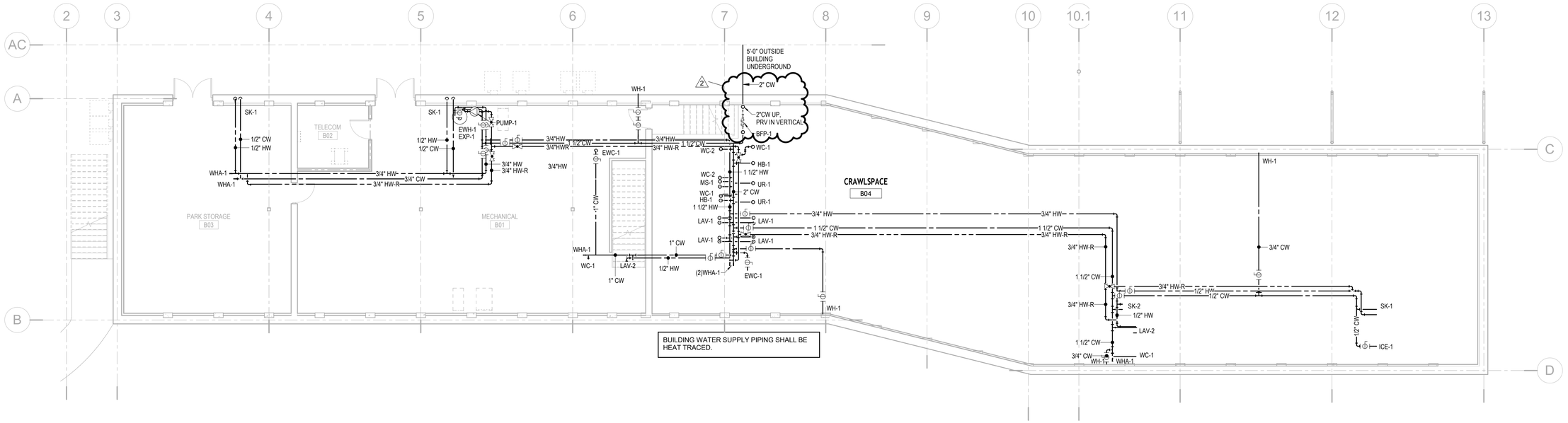

2 PC-P102 BASEMENT/CRAWLSPACE DOMESTIC WATER PLAN
1/8" = 1'-0"

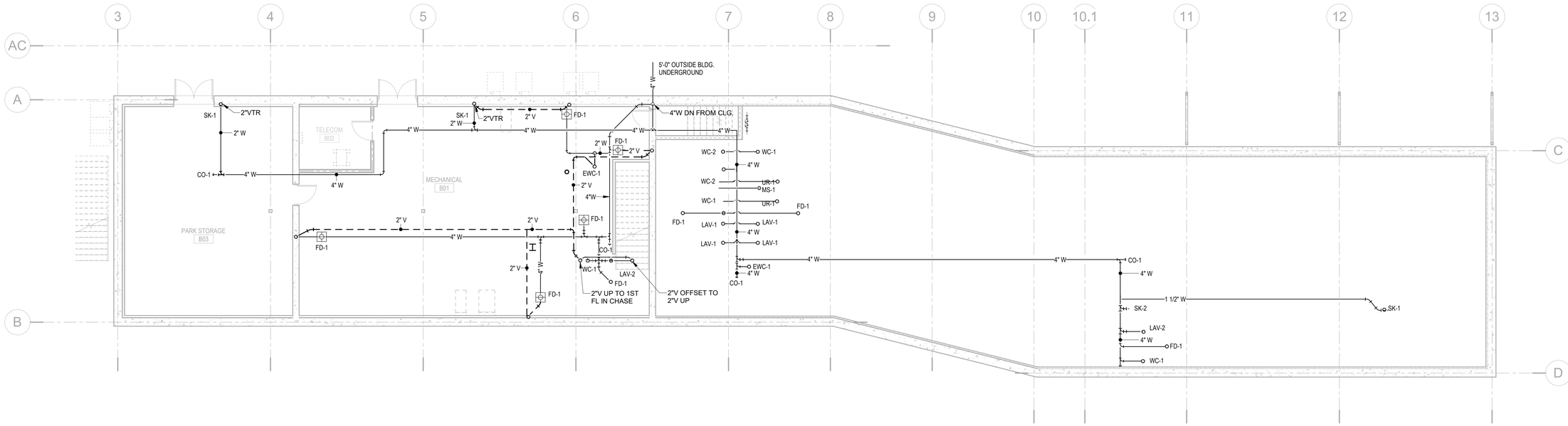

1 PC-P102 BASEMENT/CRAWLSPACE DWV PIPING
1/8" = 1'-0"

Susan Hatchell
Landscape Architecture, PLLC
711 W. North Street, Raleigh, NC 27603
p: 919-838-9600 f: 919-838-9700

Wooten
120 North Boylan Avenue • Raleigh, NC 27603-1423
(919) 828-0531 • thewootencompany.com
License Number : F-0115

BASEMENT PLUMBING PLANS

NORTH CAROLINA PROFESSIONAL ENGINEER SEAL 027928 SCOTT L. ENNIS
Document signed by: 1E0B5B3B6ACF412...
9/29/2026

LAKE MYRA COUNTY PARK
Wake County, NC

REVISIONS

2	09.29.26	Addendum 3

Date: 07/27/26

PC-P102

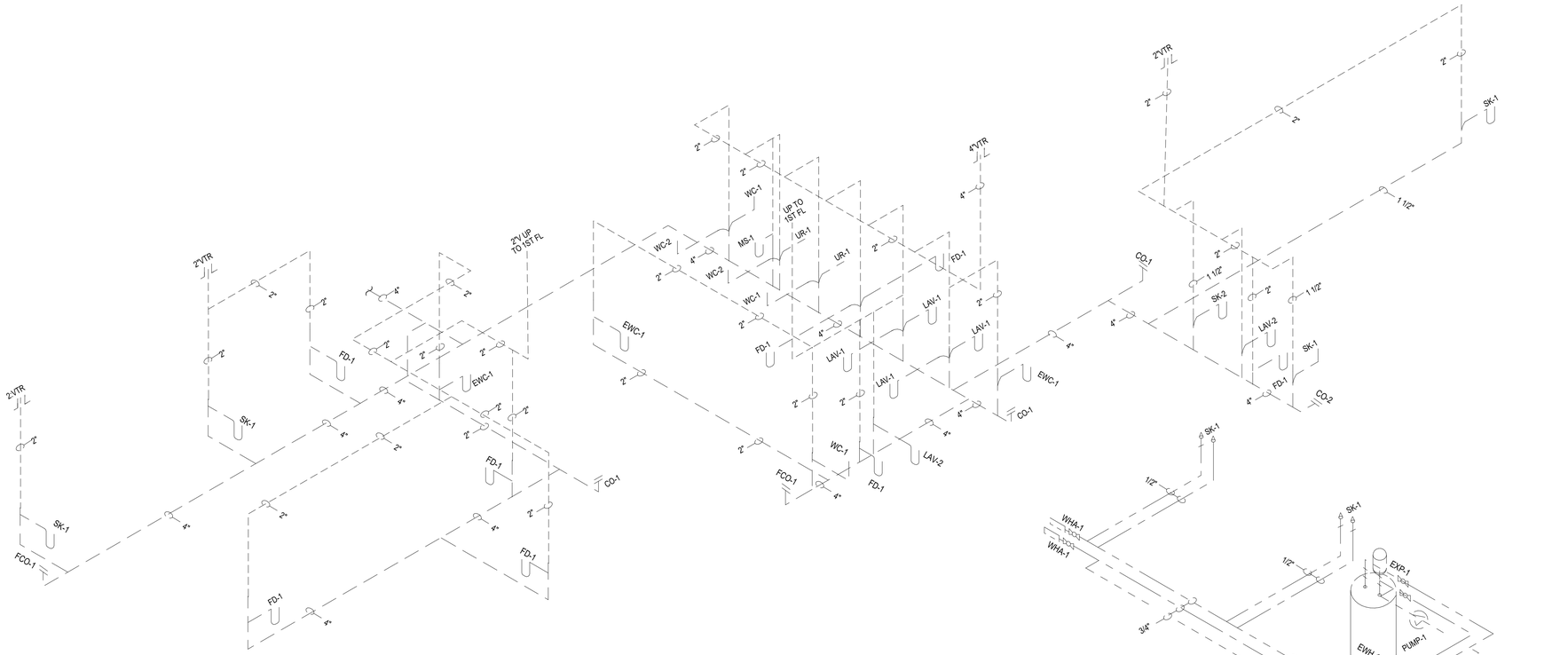

2 PC-P501 PC - WASTE AND VENT RISER DIAGRAM
NOT TO SCALE

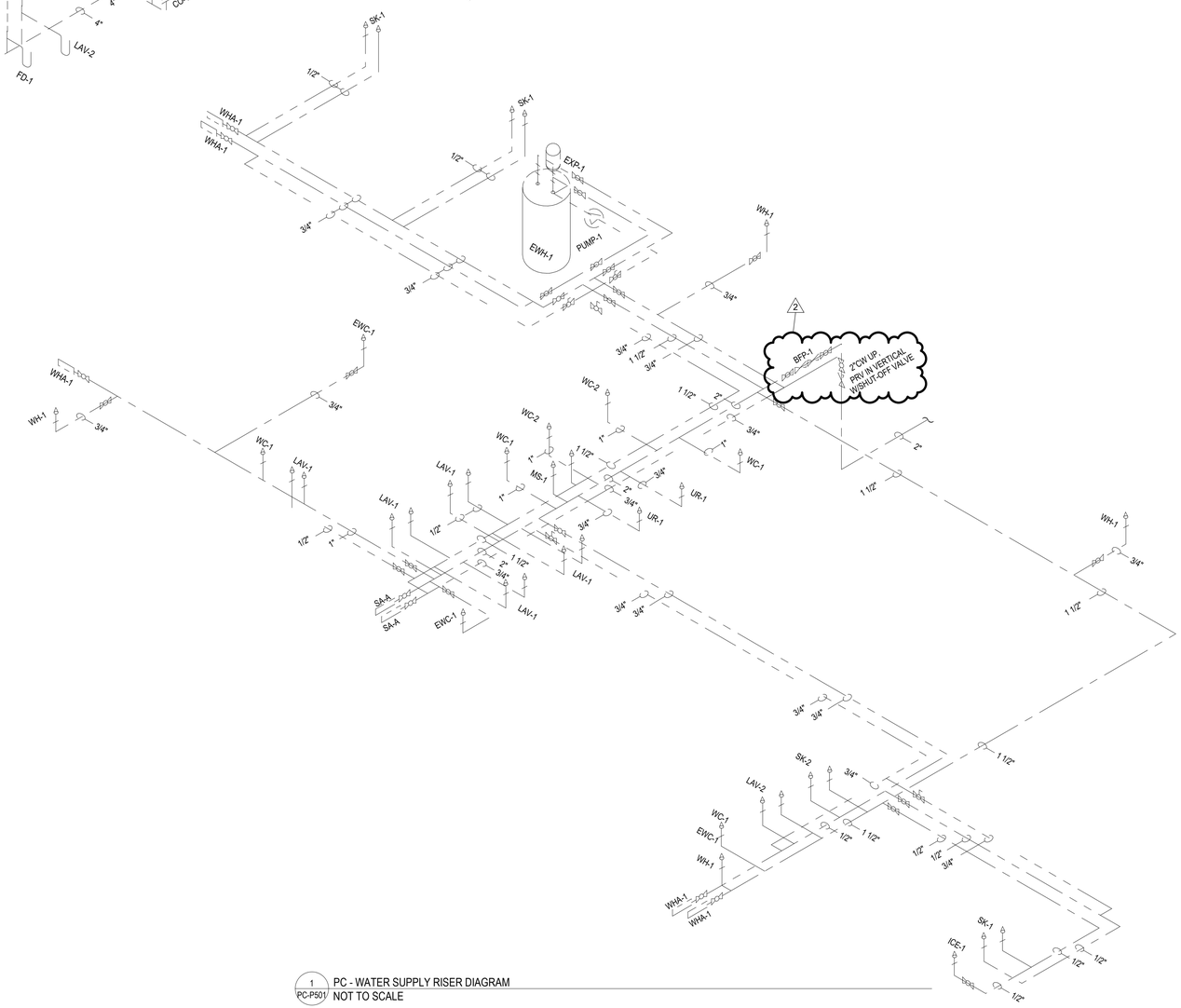

1 PC-P501 PC - WATER SUPPLY RISER DIAGRAM
NOT TO SCALE

Susan Hatchell
Landscape Architecture, PLLC
711 W. North Street, Raleigh, NC 27603
p: 919-838-9600 f: 919-838-9700

Wooten
120 North Boylan Avenue • Raleigh, NC 27603-1423
(919) 828-6531 • thewootencompany.com
License Number : F-0115

PLUMBING RISER DIAGRAMS

NORTH CAROLINA PROFESSIONAL ENGINEER
027928
SCOTT L. ENNIS
9/29/2026

LAKE MYRA COUNTY PARK
Wake County, NC

REVISIONS

2	09.29.26	Addendum 3

Date: 07/27/26

PC-P501

Park Center Split System Outdoor Unit Schedule

Mark	Manufacturer	Model	Nominal Capacity (Tons)	Total Cooling (MBH)	Total Heating (MBH)	SEER2	HSPF2	Refrigerant Type	Refrigerant Charge (lbs)	MCA	MOCP	Electrical V/Ph	Weight (Lbs)	Remarks
HP-1	Mitsubishi	PUZ-AK36NLHZ-U1	3.0	37.0	40.0	19.5	9.2	R-454B	9.9	34.0 A	56 A	208/1	224	
HP-2	Mitsubishi	PUZ-AK30NLHZ-U1	2.5	30.6	34.4	18.0	8.5	R-454B	7.7	22.0 A	37 A	208/1	155	
HP-3	Mitsubishi	PUZ-AK42NLHZ-U1	3.5	44.0	49.7	19.1	9.4	R-454B	9.9	34.0 A	56 A	208/1	224	
HP-4	Mitsubishi	PUZ-AK12NL-U1	1.0	12.4	19.0	20.0	9.8	R-454B	4.4	16.0 A	27 A	208/1	99	
HP-5	Mitsubishi	PUZ-AK12NL-U1	1.0	12.4	19.0	20.0	9.8	R-454B	4.4	16.0 A	27 A	208/1	99	
HP-6	Mitsubishi	PUZ-AK18NL-U1	1.5	18.3	24.0	18.6	8.6	R-454B	4.4	16.0 A	27 A	208/1	99	
HP-7	Mitsubishi	PUZ-AK12NL-U1	1.0	12.4	19.0	20.0	9.8	R-454B	4.4	16.0 A	27 A	208/1	99	

GENERAL NOTES:
1. PROVIDE NEOPRENE VIBRATION ISOLATION PADS AND CONCRETE HOUSEKEEPING PAD.
2. PERFORMANCE BASED AT EAT 80 DB, 67 WB. AMBIENT 95 DB, 75 WB.
3. PROVIDE HAIL GUARDS FOR CONDENSER COILS.
4. REFRIGERANT LINE SIZES AS RECOMMENDED BY THE EQUIPMENT MANUFACTURER BASED ON HORIZONTAL AND VERTICAL RUNS.
5. UNIT RATINGS AT EAT 80 DB, 67 WB. AMBIENT 95 DB, 75 WB.

Park Center Split System Indoor Unit Schedule

Mark	Manufacturer	Model	Nominal Capacity (Tons)	Supply Airflow CFM	OA CFM	ESP (in. wg)	Aux Heat KW	Aux Heat MCA	Aux Heat MOCP	AHU MCA	Electrical V/Ph	Weight (Lbs)	Remarks
AHU-1	Mitsubishi Electric	PVA-AA36NL	3.0	950	355	0.5	6.0	36.1 A	40 A	5.5 A	208/1	172	1, 2, 3, 4
AHU-2	Mitsubishi Electric	PVA-AA30NL	2.5	920	360	0.21	6.0	36.1 A	40 A	4.13 A	208/1	141	1, 2, 3, 4
AHU-3	Mitsubishi Electric	PVA-AA42NL	3.5	1200	350	0.6	7.5	45.1 A	50 A	5.63 A	208/1	172	1, 2, 3, 4
AHU-4	Mitsubishi Electric	PVA-AA12NL	1.0	250	40	0.26	3.8	22.6 A	25 A	3.0 A	208/1	113	1, 2, 3, 4
AHU-5	Mitsubishi Electric	PVA-AA12NL	1.0	250	80	0.47	3.8	22.6 A	25 A	3.0 A	208/1	113	1, 2, 3, 4
AHU-6	Mitsubishi Electric	PVA-AA18NL	1.5	520	130	0.31	3.8	22.6 A	25 A	3.0 A	208/1	113	1, 2, 3, 4
AHU-7	Mitsubishi Electric	PVA-AA12NL	1.0	250	10	0.5	3.8	22.6 A	25 A	3.0 A	208/1	113	1, 2, 3, 4

GENERAL NOTES:

A. MAXIMUM COIL FACE VELOCITY OF 500 FPM. MAXIMUM FILTER FACE VELOCITY OF 300 FPM.
B. PROVIDE WITH A DOUBLE SLOPED STAINLESS STEEL DRAIN PAN UNDER ALL COIL SECTIONS. EXTEND PIPING TO FLOOR DRAIN.
C. ALL FANS SHALL BE INTERNALLY ISOLATED.
D. ALL UNITS SHALL HAVE AN FILTER SECTION WITH 2", MERV-8 FILTERS. PROVIDE ONE SET IN THE UNIT AND THREE EXTRA SETS. ONE EXTRA SET SHALL BE INSTALLED AFTER THE SYSTEM IS BALANCED AND THE BUILDING IS CLEAN. TWO FINAL SETS ARE FOR FUTURE, TURN OVER TO OWNER.
E. ALL AIR HANDLERS SHALL BE U.L. LISTED.
F. PROVIDE UNIT WITH WALL MOUNTED THERMOSTAT WITH EQUIPMENT EACH UNIT WITH THE HEAT AND COOLING PROPER CONTROL OPERATION.
2 G. UNIT TO COME STANDARD WITH FACTORY INSTALLED DISSIPATION CONTROL BOARD AND LEAK SENSOR FOR A2L REFRIGERANT.

REMARKS:

1. PROVIDE UNIT WITH AUXILIARY ELECTRIC HEAT ACCESSORY KIT.
2. AIR HANDLING UNIT SHALL BE POWERED SEPARATELY FROM OUTDOOR UNIT. PROVIDE SEPARATE POWER KIT SPTB1.
3. HEATER SHALL BE POWERED SEPARATELY FROM AIR HANDLING UNIT.
4. PROVIDE AUXILIARY HEAT LOCKOUT ACCESSORY TO PREVENT ELECTRIC HEAT FROM OPERATING ABOVE PROGRAMMED SET OUTSIDE TEMPERATURE.

Dehumidifier Schedule

TAG	MANUFACTURER	MODEL	INSTALLATION TYPE	FAN AIRFLOW	HUMIDITY		GALLONS (PER DAY)	EFFICIENCY (PINTS/ KWH)	REFRIGERANT TYPE	ELECTRICAL		WEIGHT	REMARKS
					SETPOINT (F)	RH				V	PH		
DHU-01	SANTA FE	COMPACT70	BASE SUPPORT	150 CFM	80 °F	60%	8.75	5.5	R-454B	115 V	1	55 lb	1
DHU-02	SANTA FE	COMPACT70	BASE SUPPORT	150 CFM	80 °F	60%	8.75	5.5	R-454B	115 V	1	55 lb	1

GENERAL NOTES:

A. PROVIDE FACTORY-ASSEMBLED MECHANICAL DEHUMIDIFIER SIZED TO MAINTAIN DESIGN INDOOR RELATIVE HUMIDITY AS INDICATED.
B. UNIT SHALL BE LISTED AND LABELED AND SHALL COMPLY WITH ALL APPLICABLE CODES.
C. INSTALL IN ACCORDANCE WITH MANUFACTURER'S INSTRUCTIONS AND PROVIDE REQUIRED SERVICE CLEARANCES.
D. PROVIDE INTEGRAL OR REMOTE HUMIDISTAT FOR CONTROL. SETPOINT TO BE COORDINATED WITH ENGINEER.
E. PROVIDE CONDENSATE DRAIN WITH TRAP AND DISCHARGE TO APPROVED LOCATION.
F. PROVIDE ELECTRICAL POWER AND DISCONNECT AS REQUIRED. COORDINATE WITH DIVISION 26.

REMARKS

1. PROVIDE CONDENSATE PUMP. BASIS OF DESIGN SHALL BE LITTLE GIANT CONDENSATE PUMP, MODEL VCL-24UL. APPROVED EQUIVALENT MANUFACTURERS AND MODELS ARE ACCEPTABLE.

Park Center Fan Schedule

Identity	Location	Manufacturer	Model	Product Type	Fan Design				Fan Arrangement	Fan Drive Type	Weight	Electrical		Remarks
	Name				Capacity	TSP	bhp	RPM				Voltage	Phase	
EF-01	STAFF TOILET	GREENHECK	SP-A125	Square Centrifugal	70 CFM	0.25 in-wg	0.01 hp	900	Ceiling Mount	Direct	17 lb	115 V	1	1, 2
EF-02	JANITOR	Greenheck	CSP-A510-VG	Square Centrifugal	490 CFM	0.25 in-wg	0.15 hp	1189	Inline	Direct	36 lb	115 V	1	1, 2
EF-03	TELECOM	GREENHECK	SP-A125	Square Centrifugal	100 CFM	0.25 in-wg	0.01 hp	1058	Ceiling Mount	Direct	17 lb	115 V	1	1, 2

GENERAL NOTES:

A. PROVIDE ALL DUCT TRANSITIONS FOR FANS.
B. THE UNIT HOUSING SHALL BE CONSTRUCTED OF ALUMINUM.
C. ALL FANS TO BE U.L. LISTED.
D. PROVIDE WITH INTEGRAL DISCONNECT.
E. EXTERNALLY OR INTERNALLY MOUNTED DISCONNECT SWITCH FURNISHED BY DIVISION 23 AND INSTALLED BY DIVISION 26.
F. EXTERNALLY MOUNTED STARTER FURNISHED BY DIVISION 23 INSTALLED BY DIVISION 26.
G. PROVIDE 24V MOTORIZED DAMPER(S) UNLESS OTHERWISE DIRECTED.
H. PROVIDE OVERLOAD PROTECTION FOR ALL FANS. COORDINATE WITH DIVISION 26.
I. PROVIDE SPEED CONTROLLERS FOR ALL DIRECT DRIVE FANS.
J. ESP DOES NOT INCLUDE FACTORY BACKDRAFT DAMPER. THIS PRESSURE DROP SHALL BE ADDED BY THE MANUFACTURER TO THE ESP LISTED WHEN SELECTING FANS.

REMARKS:

1. PROVIDE HANGING VIBRATION ISOLATION KIT WITH NEOPRENE ISOLATORS.
2. PROVIDE DISCONNECT SWITCH, NEMA-1 INDOORS, NEMA 3R OUTDOORS, TOGGLE, MOUNTED AND WIRED.
3. SPARK-A RESISTANT CONSTRUCTION.
4. PROVIDE DISCONNECT SWITCH, OSHA MOTOR SIDE GUARD, WALL HOUSING, AND CAST ALUMINUM CONSTRUCTION.
5. PROVIDE GREENHECK BVE808 OR EQUIVALENT ALUMINUM BRICK VENT WITH INSECT SCREEN.
6. PROVIDE CARBON MONOXIDE SENSOR FOR CONTROLLING FAN.

Park Center Louver Schedule

Tag	Manf.	Model	Purpose	CFM	Size	Max APD	Minimum Free Area (Sq.ft.)	Max FPM	Remarks
LV-01	GREENHECK	EHH-601	INTAKE	100	16X12	0.1	0.16	600	1
LV-02	GREENHECK	ESD-202	EXHAUST	70	8X8	0.13	0.1	900	1
LV-03	GREENHECK	ESD-435	INTAKE	200	12X14	0.1	0.4	600	1

GENERAL NOTES:

A. PROVIDE FRAMED 1/2" x 1/2" ALUMINUM BIRD SCREEN FOR ALL LOUVERS
B. ALL LOUVERS SHALL BE RATED FOR THE PROJECT WIND ZONE. REFER TO STRUCTRAL DRAWINGS.
C. LOUVERS SHALL HAVE 3-COAT 70% PVDF FINISH (AAMA 2605) WITH A DRY FILM THICKNESS OF 2.0 mil MINIMUM. PROVIDE STANDARD AND CUSTOM COLOR CHARTS WITH SUBMITTAL. COLOR SHALL BE SELECTED BY ARCHITECT FROM THE FULL RANGE.
D. ALL LOUVERS SHALL BE AMCA 500-L CERTIFIED FOR AIR PERFORMANCE, WATER PENETRATION,, AND WIND DRIVEN RAIN AND BEAR APPROPRIATE SEAL. ALL LOUVERS SHALL BE RATED AS RAIN PENETRATION CLASS A FOR THE FACE VELOCITY AT THE CFM SCHEDULED.
E. EQUIVALENTS BY RUSKIN, ARROW, AIROLITE, NAILOR, RELIABLE, POTTORFF, OR AS LISTED IN THE SPECIFICATIONS

REMARKS:

1. PROVIDE MOTORIZED DAMPER TO OPEN WHEN ASSOCIATED FAN RUNS

Park Center Grilles, Registers & Diffusers Schedule

Tag	Service	Manufacturer	Model	Type	Deflection Type	Border Application	Neck Size	Face Size	Slots Qty - Width	Blades Spacing - Angle	Remarks
A	Supply	PRICE	SCD	Square Cone	Fixed Deflection	Lay-In Full Face	6"Ø	24x24			1, 2, 3, 4
B	Supply	PRICE	SDGE	Spiral Grille	Double Deflection	Duct Mount Frame	10"x4"			3/4" - 0°	1, 5
C	Supply	PRICE	SDGE	Spiral Grille	Double Deflection	Duct Mount Frame	8"x6"			3/4" - 0°	1, 5
D	Supply	PRICE	SCD	Square Cone	Fixed Deflection	Surface Mount Frame	6"Ø	12x12			1, 2, 3, 4
F	Supply	PRICE	520	Sidewall	Double Deflection	Surface Mount	10"x6"			3/4" - 0°	1, 5, 6
G	Supply	PRICE	ML-39	Slot Diffuser		Surface Mount Frame	10"Ø	4'-0"L	3 - 1"		1, 2, 3, 4, 6
Q	Return	PRICE	PDDR	Perforated		Lay-In Full Face	6"x6"	24x24			1, 2, 3, 4
R	Return	PRICE	SDGER	Spiral Grille		Duct Mount Frame	12"x4"				1, 5
S	Return	PRICE	SDGER	Spiral Grille		Duct Mount Frame	20"x6"				1, 5
T	Return	PRICE	530	Sidewall	Single Deflection	Surface Mount	8"x8"			3/4" - 45°	1, 5, 6
U	Return	PRICE	530	Sidewall	Single Deflection	Surface Mount	14"x18"			3/4" - 45°	1, 5, 6
X	Exhaust	PRICE	530	Sidewall	Single Deflection	Surface Mount	8"x6"			3/4" - 45°	1, 5, 6
Y	Exhaust	PRICE	PDDR	Perforated		Surface Mount	12"x12"	12x12			1, 2, 3, 4, 6
Z	Exhaust	PRICE	PDDR	Perforated		Surface Mount Frame	10"x10"	24x24			1, 2, 3, 4, 6

GENERAL NOTES:

A. BASIS OF DESIGN IS PRICE. EQUIVALENTS BY TITUS, KRUEGER, TUTTLE AND BAILEY, NAILOR, OR AS LISTED IN SPECIFICATIONS
B. PROVIDE VOLUME DAMPERS AT TAKE-OFF FOR EACH GRILLE
C. ALL AIR DISTRIBUTION DEVICES SHALL BE ALUMINUM
D. THE PRICE MODELS SCHEDULED HERE ARE BASIS OF DESIGN, INCLUDING GENERATED NOISE. PROPOSED SUBSTITUTIONS WILL BE JUDGED BY THOSE CRITERIA ALSO
E. WHERE LOCATED IN HARD CEILINGS, PROVIDE ALUMINUM MOUNT FRAME/PLASTER FRAME FOR HARD CEILING THAT ALLOWS DIFFUSER/GRILLE WITH FLEX CONNECTION TO BE LIFTED OUT OF FRAME TO ACCESS CEILING SPACE. TYPICAL OF ALL HARD CEILING LOCATIONS. REFER TO ARCHITECTURAL REFLECTED CEILING PLAN
F. FOR SIDE WALL GRILLES OR GRILLES IN HARD CEILING WHERE BALANCING DAMPER IS INACCESSIBLE, PROVIDE REMOTE CABLE OPERATED, GEAR DRIVEN BALANCING DAMPER OPERABLE FROM FACE OF DIFFUSER

REMARKS:

1. COLOR SHALL BE SELECTED BY ARCHITECT DURING SUBMITTAL REVIEW.
2. PROVIDE WITH TRIM TO MATCH CEILING TYPE. REFER TO ARCHITECTURAL REFLECTED CEILING PLANS FOR CEILINGS
3. PROVIDE DIFFUSER/GRILLE WITH ROUND NECK OR PROVIDE SQUARE TO ROUND TRANSITION
4. ALL CEILING MOUNTED RETURN GRILLES SHALL BE FULL FACED. NO LAY-IN PANELS ALLOWED
5. PROVIDE OPPOSED BLADE ALUMINUM DAMPER
6. WHERE MOUNTED ON A WALL OR OTHER FINISHED ARCHITECTURAL SURFACE, PROVIDE CONCEALED MOUNTING BRACKET OPTION IN LIEU OF COUNTERSUNK SCREW TYPE.

Susan Hatchell
Landscape Architecture, PLLC
711 W. North Street, Raleigh, NC 27603
p: 919-838-9600 f: 919-838-9700

Wooten
120 North Boylan Avenue • Raleigh, NC 27603-1423
(919) 828-0531 • thewootencompany.com
License Number : F-0115

SCHEDULES

NORTH CAROLINA PROFESSIONAL ENGINEER SEAL 027928 SCOTT L. ENNIS
DocuSigned by: 2E0B6B0B6ACF410...
9/29/2026

LAKE MYRA COUNTY PARK
Wake County, NC

REVISIONS

2	09.29.26	Addendum 3

Date: 07/27/26

PC-M701

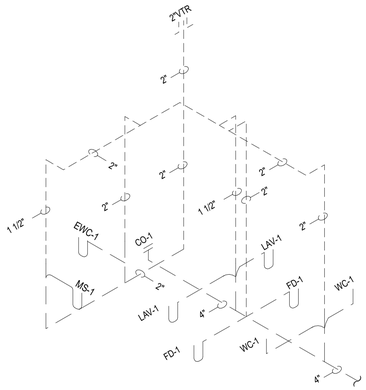

4 WS-P101 WS - WASTE AND VENT RISER DIAGRAM
NOT TO SCALE

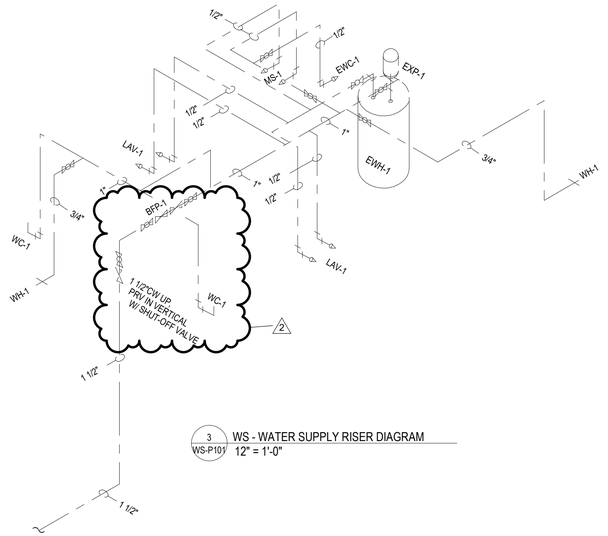

3 WS-P101 WS - WATER SUPPLY RISER DIAGRAM
12" = 1'-0"

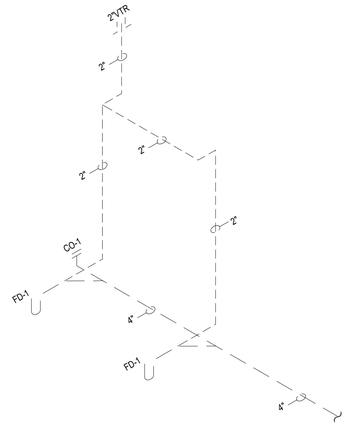

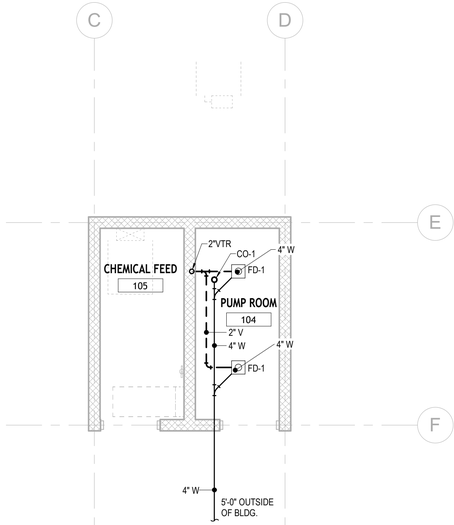

5 WS-P101 WELL HOUSE - PLUMBING PLAN
NOT TO SCALE

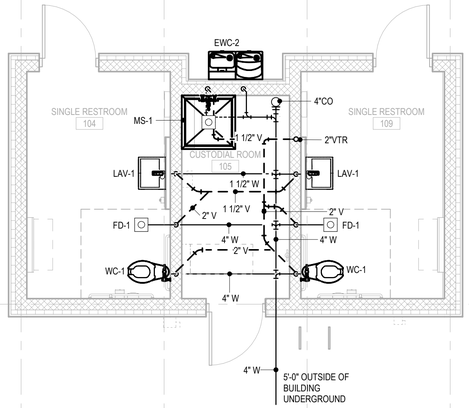

2 WS-P101 SHELTER - DWV PIPING PLAN
1/4" = 1'-0"

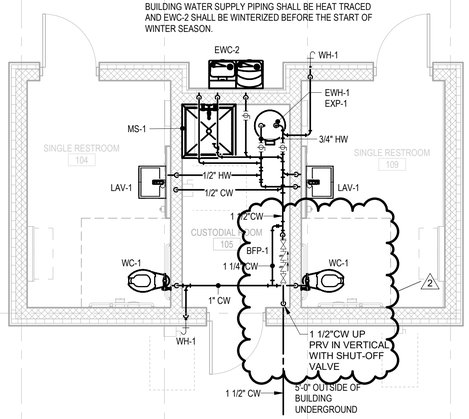

1 WS-P101 SHELTER - DOMESTICE WATER PLAN
1/4" = 1'-0"

Susan Hatchell
Landscape Architecture, PLLC
711 W. North Street, Raleigh, NC 27603
p: 919-838-9600 f: 919-838-9700

Wooten
120 North Boylan Avenue • Raleigh, NC 27603-1423
(919) 828-0531 • thewootencompany.com
License Number : F-0115

PLANS

NORTH CAROLINA PROFESSIONAL ENGINEER SEAL 027928 SCOTT L. ENNIS
Documents signed by: 1958B5B3B6ACF412...
9/29/2026

LAKE MYRA COUNTY PARK
Wake County, NC

REVISIONS

2	09.29.26	Addendum 3

Date: 07/27/26

WS-P101

Western Parcel Mini-Split System Indoor Unit Schedule

Mark	Manufacturer	Model	Product Type	Nominal Capacity	Design Airflow Rate	Electrical		Product Weight	Notes
						Voltage	Phase		
DS-01	Mitsubishi	PKA-AL18NL	Cooling Only	1.5 ton	215 CFM	208 V	1	28 lb	1

GENERAL NOTES:

A. BASIS OF DESIGN IS MITSUBISHI EQUIPMENT. EQUIVALENTS BY DAIKIN, LG, OR AS LISTED IN THE SPECIFICATIONS
B. PROVIDE CONDENSATE PUMP, POWERED DIRECTLY FROM INDOOR UNIT TERMINALS, WITH EACH UNIT. 1 GPH AT 33 FT OF HEAD
C. PROVIDE PAR-42MAAUB WIRED CONTROLLER FOR ALL UNITS UNLESS OTHERWISE SPECIFIED.
D. UNITS SHALL BE TESTED PER AHRI 1230
E. PROVIDE BYOND INVERTER ACS
F. UNIT SHALL BE PROVIDED STANDARD WITH FACTORY INSTALLED DISSIPATION CONTROL BOARD AND LEAK SENSOR FOR A2L REFRIGERANT.

REMARKS:

1. POWER AND LOW VOLTAGE WIRING AND CONDUIT INTERCONNECTING INDOOR AND OUTDOOR UNITS SHALL BE PROVIDED BY DIVISION 23

Western Parcel Mini-Split Outdoor Split System Schedule

Mark	Manufacturer	Model	Product Type	Rated Cooling Capacity	SEER2	Refrigerant Type	Refrigerant Est. Charge	Electrical		MCA	MOCP	Product Weight	Notes
								Voltage	Phase				
DSC-01	Mitsubishi	PUY-A18NKA7	Cooling Only	18,000 Btu/h	19.5	R-454B	4.4 lbm	208 V	1	16.0 A	27.0 A	99 lb	

GENERAL NOTES:

A. BASIS OF DESIGN IS MITSUBISHI EQUIPMENT. EQUIVALENTS BY DAIKIN, LG, OR AS LISTED IN THE SPECIFICATIONS.
B. UNITS SHALL BE TESTED PER AHRI 1230
C. PROVIDE OPTIONAL WIND BAFFLE FOR ALL UNITS FOR LOW AMBIENT COOLING DOWN TO 0 DEG. F
D. ALL ROOF CURBS/RAILS AND ATTACHMENTS THERETO SHALL BE THIRD PARTY LISTED FOR THE PROJECT WIND ZONE. ANCHORING DETAILS FOR THE UNIT TO THE CURBS, RAILS OR THE STRUCTURE SHALL BE INCLUDED WITH THE SUBMITTAL
E. REFRIGERANT LINE SIZES AS RECOMMENDED BY THE EQUIPMENT MANUFACTURER BASED ON HORIZONTAL AND VERITCAL RUNS.

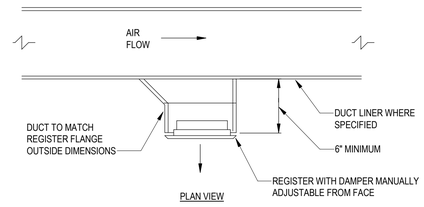

1 / VS-M601 TYPICAL DUCT MOUNTED REGISTER (RECTANGULAR DUCT)
NOT TO SCALE

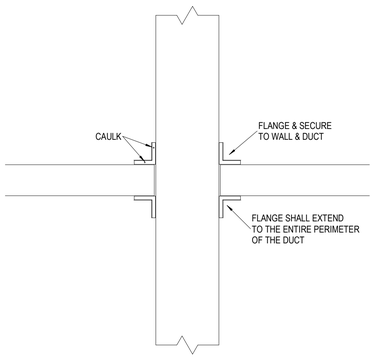

2 / WS-M601 DETAIL - NON-RATED DUCT PENETRATION
1/8" = 1'-0"

4 / WS-M601 DETAIL - OUTSIDE AIR/EXHAUST LOUVER
1/8" = 1'-0"

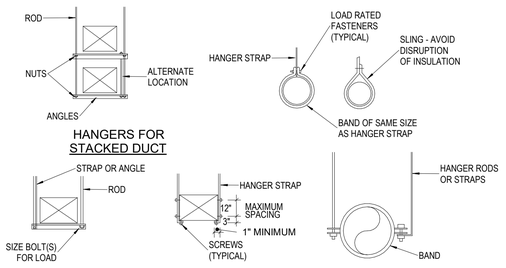

NOTES:

1. REINFORCEMENT MAY BE USED FOR ATTACHMENT IF IT QUALIFIES FOR BOTH DUTIES.
2. DO NOT EXCEED LOAD RATINGS FOR METHOD USED. FROM SMACNA DUCT STANDARDS

3 / WS-M601 DETAIL - TYPICAL DUCT HANGERS
NOT TO SCALE

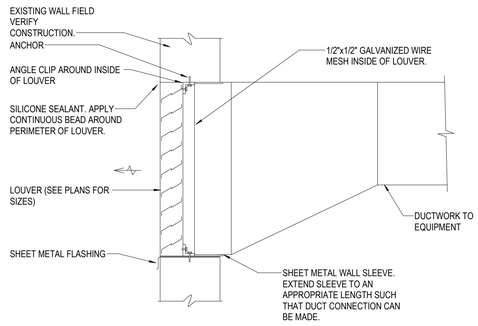

5 / WS-M601 LOUVER ASSEMBLY DETAIL
NOT TO SCALE

Western Parcel Shelters Grilles, Registers & Diffusers Schedule

Mark	Description	Manf.	Type	Model	Installation	Border Application	Size	Remarks
H	Supply Grille	PRICE	Sidewall	620	Wall Mount	Surface Mount	8"x8"	1, 2, 3
X	Exhaust	PRICE	Sidewall	530	Wall Mount	Surface Mount	8"x8"	1, 5, 6

GENERAL NOTES:

A. BASIS OF DESIGN IS PRICE. EQUIVALENTS BY TITUS, KRUEGER, TUTTLE AND BAILEY, NAILOR, OR AS LISTED IN SPECIFICATIONS
B. PROVIDE VOLUME DAMPERS AT TAKE-OFF FOR EACH GRILLE
C. ALL AIR DISTRIBUTION DEVICES SHALL BE ALUMINUM
D. THE PRICE MODELS SCHEDULED HERE ARE BASIS OF DESIGN, INCLUDING GENERATED NOISE. PROPOSED SUBSTITUTIONS WILL BE JUDGED BY THOSE CRITERIA ALSO
E. WHERE LOCATED IN HARD CEILINGS, PROVIDE ALUMINUM MOUNT FRAME/PLASTER FRAME FOR HARD CEILING THAT ALLOWS DIFFUSER/GRILLE WITH FLEX CONNECTION TO BE LIFTED OUT OF FRAME TO ACCESS CEILING SPACE. TYPICAL OF ALL HARD CEILING LOCATIONS. REFER TO ARCHITECTURAL REFLECTED CEILING PLAN
F. FOR SIDE WALL GRILLES, PROVIDE REMOTE CABLE OPERATED, GEAR DRIVEN BALANCING DAMPER OPERABLE FROM FACE OF DIFFUSER

REMARKS:

1. COLOR SHALL BE SELECTED BY THE ARCHITECT AT THE TIME OF SUBMITTAL REVIEW.
2. PROVIDE OPPOSED BLADE ALUMINUM DAMPER
3. WHERE MOUNTED ON A WALL OR OTHER FINISHED ARCHITECTURAL SURFACE, PROVIDE CONCEALED MOUNTING BRACKET OPTION IN LIEU OF COUNTERSUNK SCREW TYPE.

Western Parcel Fan Schedule

Mark	Manufacturer	Model	Fan Design				Fan Arrangement	Fan Drive Type	Weight	Electrical		Remarks
			Capacity	TSP	bhp	RPM				Voltage	Phase	
EF-01	COOK	10XW28D17	100 CFM	0.10 in-wg	0.13 hp	770	WALL MOUNTED	DIRECT	42 lb	120 V	1	2, 3, 4, 5, 6
EF-02	GREENHECK	SQ-70-VG	140 CFM	0.27 in-wg	0.02 hp	1450	INLINE	DIRECT	27 lb	120 V	1	1, 2

GENERAL NOTES:

A. PROVIDE ALL DUCT TRANSITIONS FOR FANS.
B. THE UNIT HOUSING SHALL BE CONSTRUCTED OF ALUMINUM.
C. ALL FANS TO BE U.L. LISTED.
D. PROVIDE WITH INTEGRAL DISCONNECT.
E. EXTERNALLY OR INTERNALLY MOUNTED DISCONNECT SWITCH FURNISHED BY DIVISION 23 AND INSTALLED BY DIVISION 26.
F. EXTERNALLY MOUNTED STARTER FURNISHED BY DIVISION 23 INSTALLED BY DIVISION 26.
G. PROVIDE 24V MOTORIZED DAMPER(S) UNLESS OTHERWISE DIRECTED.
H. PROVIDE OVERLOAD PROTECTION FOR ALL FANS, COORDINATE WITH DIVISION 26.
I. PROVIDE SPEED CONTROLLERS FOR ALL DIRECT DRIVE FANS.
J. ESP DOES NOT INCLUDE FACTORY BACKDRAFT DAMPER. THIS PRESSURE DROP SHALL BE ADDED BY THE MANUFACTURER TO THE ESP LISTED WHEN SELECTING FANS.

REMARKS:

1. PROVIDE HANGING VIBRATION ISOLATION KIT WITH NEOPRENE ISOLATORS.
2. PROVIDE DISCONNECT SWITCH, NEMA-1 INDOORS, NEMA 3R OUTDOORS OR FOR CORROSION RESISTANCE, TOGGLE, MOUNTED AND WIRED.
3. PROVIDE OSHA MOTOR SIDE GUARD, WALL HOUSING, AND CAST ALUMINUM CONSTRUCTION.
4. PROVIDE CORROSION RESISTANT WALL COLLAR.
5. PROVIDE CORROSION RESISTANT FASTENERS.
6. PROVIDE PHENOLIC EPOXY POWDER COATING FOR CORROSION RESISTANCE.

Western Parcel Louver Schedule

Mark	Manf.	Model	Purpose	CFM	Size	Minimum Free Area (Sq.ft.)	Max FPM	Remarks
LV-01	GREENHECK	EHH-601	INTAKE	100	16X8	0.16	600	1
LV-02	GREENHECK	EHH-601	EXHAUST	100	16X16	0.54	750	1
LV-03	GREENHECK	EHH-601	INTAKE	40	16X8	0.16	600	1
LV-04	GREENHECK	EHH-601	EXHAUST	140	16X8	0.16	750	1

GENERAL NOTES:

A. PROVIDE FRAMED 1/2" x 1/2" ALUMINUM BIRD SCREEN FOR ALL LOUVERS
B. ALL LOUVERS SHALL BE RATED FOR THE PROJECT WIND ZONE. REFER TO STRUCTRAL DRAWINGS.
C. LOUVERS SHALL HAVE 3-COAT 70% PVDF FINISH (AAMA 2605) WITH A DRY FILM THICKNESS OF 2.0 mil MINIMUM. PROVIDE STANDARD AND CUSTOM COLOR CHARTS WITH SUBMITTAL. COLOR SHALL BE SELECTED BY ARCHITECT FROM THE FULL RANGE.
D. ALL LOUVERS SHALL BE AMCA 500-L CERTIFIED FOR AIR PERFORMANCE, WATER PENETRATION,, AND WIND DRIVEN RAIN AND BEAR APPROPRIATE SEAL. ALL LOUVERS SHALL BE RATED AS RAIN PENETRATION CLASS A FOR THE FACE VELOCITY AT THE CFM SCHEDULED.
E. EQUIVALENTS BY RUSKIN, ARROW, AIROLITE, NAILOR, RELIABLE, POTTORFF, OR AS LISTED IN THE SPECIFICATIONS

REMARKS:

1. PROVIDE MOTORIZED DAMPER TO OPEN WHEN ASSOCIATED FAN RUNS

Western Parcel Electric Cabinet Heater Schedule

Mark	Manufacturer	Model	Product Type	Fan Capacity	Heating Airflow Design			Electrical		Notes
					Output	Airflow	EAT	Voltage	Phase	
EUH-01	Berko	FRC	Cabinet	100 CFM	3,412 Btu/h	100 CFM	60 °F	120 V	1	1, 2, 3
EUH-02	Berko	FRC	Cabinet	100 CFM	3,412 Btu/h	100 CFM	60 °F	120 V	1	1, 2, 3
EUH-03	Berko	FRC	Cabinet	100 CFM	3,412 Btu/h	100 CFM	60 °F	120 V	1	1, 2, 3
EUH-04	Berko	FRC	Cabinet	100 CFM	3,412 Btu/h	100 CFM	60 °F	120 V	1	1, 2, 3
EUH-05	Berko	FRC	Cabinet	100 CFM	3,412 Btu/h	100 CFM	60 °F	120 V	1	1, 2, 3

GENERAL NOTES:

A. UNITS BASED ON MARKEL 5100 AND 3420 SERIES.
B. EQUIVALENTS: REZNOR, BERKO, INDEECO OR AS LISTED IN SPECIFICATIONS.
C. WHERE A REMOTE WALL MOUNTED THERMOSTAT IS INDICATED, PROVIDE 24V THERMOSTAT AND CONTROLS TRANSFORMER.
D. MOUNTING HEIGHTS ARE TO BOTTOM OF UNIT.

REMARKS:

1. PROVIDE SEMI-RECESSED SLEEVE.
2. PROVIDE FACTORY CIRCUIT BREAKER.
3. PROVIDE BUILT-IN TAMPERPROOF THERMOSTAT.
4. PROVIDE WALL-MOUNTED 24V THERMOSTAT.
5. PROVIDE HANGING BRACKET.
6. PROVIDE FACTORY MOUNTED DISCONNECT SWITCH.
7. BAS CONTRACTOR TO PROVIDE T-STAT.

Susan Hatchell
Landscape Architecture, PLLC
711 W. North Street, Raleigh, NC 27603
p: 919-838-9600 f: 919-838-9700

Wooten
120 North Boylan Avenue • Raleigh, NC 27603-1423
(919) 828-0531 • thewootencompany.com
License Number - F-0115

DETAILS & SCHEDULES

NORTH CAROLINA PROFESSIONAL
DocuSigned by:
SCOTT L. ENNIS
ENGINEER
027928
1ED8953666ACF412...
9/29/2026

LAKE MYRA COUNTY PARK
Wake County, NC

REVISIONS

2	09.29.26	Addendum 3

Date: 07/27/26

WS-M601

Docusign Envelope ID: 3CDCD2C9-8BED-8264-836A-D89802AC2A90

GENERAL CONSTRUCTION SPECIFICATIONS

1. THESE DRAWINGS ARE THE PROPERTY OF NV5 ENGINEERS AND CONSULTANTS, INC. FOR USE SOLELY FOR THIS PROJECT AND SHALL NOT BE REPRODUCED, COPIED OR USED FOR OTHER PURPOSES WITHOUT WRITTEN PERMISSION OF NV5 ENGINEERS AND CONSULTANTS, INC.
2. THE DESIGN PROFESSIONAL WHOSE SEAL APPEARS ON THESE DRAWINGS IS THE STRUCTURAL ENGINEER OF RECORD (SER) FOR THIS PROJECT. THE SER BEARS THE RESPONSIBILITY OF THE PRIMARY STRUCTURAL SYSTEM AND THE PERFORMANCE OF THIS STRUCTURE. NO OTHER PARTY MAY REVISE, ALTER, OR DELETE THESE CONSTRUCTION DOCUMENTS WITHOUT WRITTEN PERMISSION OF THE SER. FOR THE PURPOSES OF THESE CONSTRUCTION DOCUMENTS THE SER AND NV5 ENGINEERS AND CONSULTANTS, INC SHALL BE CONSIDERED THE SAME ENTITY.
3. THIS STRUCTURE IS ONLY STABLE IN ITS COMPLETED FORM. THE CONTRACTOR SHALL PROVIDE ALL REQUIRED TEMPORARY BRACING DURING CONSTRUCTION TO STABILIZE THE STRUCTURE. TEMPORARY SHORING AND BRACING METHODS ARE NOT THE RESPONSIBILITY OF THE SER AND ARE BEYOND THE SCOPE OF THESE DRAWINGS.
4. THE STRUCTURAL ENGINEER OF RECORD IS NOT RESPONSIBLE FOR CONSTRUCTION SEQUENCES, METHODS, OR TECHNIQUES IN CONNECTION WITH THE CONSTRUCTION OF THIS STRUCTURE. THE SER WILL NOT BE HELD RESPONSIBLE FOR THE CONTRACTOR'S FAILURE TO CONFORM TO THE CONSTRUCTION DOCUMENTS, SHOULD ANY NON-CONFORMITIES OCCUR.
5. ANY STRUCTURAL ELEMENTS OR DETAILS NOT FULLY DEVELOPED ON THE CONSTRUCTION DRAWINGS SHALL BE COMPLETED UNDER THE DIRECTION OF A LICENSED PROFESSIONAL ENGINEER. THESE SHOP DRAWINGS SHALL BE SUBMITTED TO THE SER FOR REVIEW BEFORE ANY CONSTRUCTION BEGINS. SEE THE "SUBMITTALS" SECTION OF THESE SPECIFICATIONS.
6. STRUCTURAL DRAWINGS SHALL BE USED IN CONJUNCTION WITH AND COORDINATED WITH THE ARCHITECTURAL, MECHANICAL, PLUMBING, ELECTRICAL, AND CIVIL DRAWINGS. THIS COORDINATION IS NOT THE RESPONSIBILITY OF THE SER. SHOULD ANY DISCREPANCIES BECOME APPARENT THE CONTRACTOR SHALL NOTIFY THE SER BEFORE ANY CONSTRUCTION BEGINS.
7. VERIFICATION OF ASSUMED FIELD CONDITIONS IS NOT THE RESPONSIBILITY OF THE STRUCTURAL ENGINEER OF RECORD. THE CONTRACTOR SHALL VERIFY THE FIELD CONDITIONS FOR ACCURACY AND REPORT ANY DISCREPANCIES TO THE SER BEFORE CONSTRUCTION BEGINS.
8. THE STRUCTURAL ENGINEER OF RECORD IS NOT RESPONSIBLE FOR ANY SECONDARY STRUCTURAL ELEMENTS OR NON-STRUCTURAL ELEMENTS, EXCEPT FOR THE ELEMENTS SPECIFICALLY NOTED ON THE STRUCTURAL DRAWINGS.
9. THIS STRUCTURE AND ALL CONSTRUCTION SHALL CONFORM TO ALL APPLICABLE SECTIONS OF THE **NORTH CAROLINA STATE BUILDING CODE** AND ANY LOCAL LAWS WHERE THE STRUCTURE IS TO BE CONSTRUCTED.

DESIGN LOADS

1. BUILDING CODES
   - A. **NORTH CAROLINA STATE BUILDING CODE 2018 EDITION**
   - B. 2015 INTERNATIONAL BUILDING CODE
   - C. MINIMUM DESIGN LOADS FOR BUILDING AND OTHER STRUCTURES, ASCE 7-10
2. RISK CATEGORY — II
3. SNOW LOAD
   - A. GROUND SNOW LOAD, P_g — 15 PSF
   - B. FLAT-ROOF SNOW LOAD, P_f — 10.5 PSF
   - C. SNOW EXPOSURE FACTOR, C_e — 1.00
   - D. SNOW IMPORTANCE FACTOR, I_s — 1.00
   - E. THERMAL FACTOR, C_t — 1.00
   - F. BALANCED SNOW LOAD — 10.5 PSF
4. FLOOR LOADS (3)
   - A. UNIFORM PEDESTRIAN LOAD — 100 PSF
   - B. 4000 LAB TOTAL WEIGHT LIGHT SERVICE VEHICLE LOAD
5. WIND LOADS / DATA
   - A. ULTIMATE WIND SPEED (3 SECOND GUST), V_{ULT} — 115 MPH
   - B. NOMINAL WIND SPEED, V_{ASD} — 89 MPH
   - C. EXPOSURE — C
   - D. INTERNAL PRESSURE COEFFICIENT, GC_{pi} — ± 0.18
   - E. TOPOGRAPHY FACTOR, K_{zt} — 1.00
   - F. APPLIED DIRECTIONALITY FACTOR, K_d — 0.85
6. SEISMIC LOADS / DATA
   - A. ANALYSIS PROCEDURE — EQUIVALENT LATERAL FORCE
   - B. SITE CLASS — D
   - C. SEISMIC IMPORTANCE FACTOR, I_e — 1.00
   - D. MAPPED SPECTRAL RESPONSE ACCELERATION (0.2 sec.), S_s — 0.12
   - E. MAPPED SPECTRAL RESPONSE ACCELERATION (1.0 sec.), S_1 — 0.06
   - F. SPECTRAL RESPONSE COEFFICIENT, S_{DS} — 0.122
   - G. SPECTRAL RESPONSE COEFFICIENT, S_{D1} — 0.092
   - H. SEISMIC DESIGN CATEGORY — B
   - I. BASIC STRUCTURAL SYSTEM — CANTILEVERED COLUMN SYSTEM
   - J. RESPONSE MODIFICATION FACTOR, R — 1.5
   - K. SYSTEM OVER-STRENGTH FACTOR, Ω — 1.5
   - L. DEFLECTION AMPLIFICATION FACTOR, C_d — 1.5
   - M. SEISMIC RESPONSE COEFFICIENT, C_s — 0.085
   - N. SEISMIC RESISTING SYSTEM — TIMBER FRAMES
7. LOADS ON HANDRAILS, GUARDRAILS AND GUARDS
   - A. UNIFORM LOAD: 50 PLF APPLIED IN ANY DIRECTION
   - B. CONCENTRATED LOAD: 200 LBS APPLIED IN ANY DIRECTION
   - C. INTERMEDIATE RAILS / BALUSTERS / PANEL FILLERS, EXCLUDING HANDRAIL: 50 LBS HORIZONTALLY APPLIED NORMAL LOAD ON AN AREA EQUAL TO 1 SQUARE FOOT INCLUDING OPENINGS AND SPACE BETWEEN RAILS
   - D. LOADS NOTED ABOVE ARE NOT REQUIRED TO ACT CONCURRENTLY
8. LOADS ON GRAB BARS, ACCESSIBLE SEATS / BENCHES AND GUARDS
   - A. CONCENTRATED LOAD: 250 LBS IN ANY DIRECTION AT ANY POINT
9. A PROGRAM OF SPECIAL INSPECTIONS IS PROVIDED IN ACCORDANCE WITH THE **2018 NORTH CAROLINA STATE** BUILDING CODE CHAPTER 17. THE SCOPE OF THE PROGRAM OF SPECIAL INSPECTIONS AND/OR QUALITY ASSURANCE PLANS WILL INCLUDE THE PRIMARY STRUCTURAL SYSTEM AND OTHER SECONDARY STRUCTURAL ELEMENTS WHICH ARE SPECIFICALLY DESIGNED BY THE SER. THE PROGRAM PROVIDED BY THE SER WILL SPECIFICALLY EXCLUDE ALL NON-STRUCTURAL ELEMENTS INCLUDING BUT NOT LIMITED TO SMOKE CONTROL AND SMOKE EXHAUST SYSTEMS, SPRAYED FIRE-RESISTANT MATERIALS, MECHANICAL, PLUMBING, AND ELECTRICAL SYSTEMS AND THEIR ATTACHMENTS. THE PLANS OF SPECIAL INSPECTIONS FOR THESE EXCLUDED ITEMS MUST BE PREPARED BY THE REGISTERED DESIGN PROFESSIONAL RESPONSIBLE FOR THE DESIGN OF EACH DESIGNATED SYSTEM THAT IS SUBJECT TO SPECIAL INSPECTIONS, WHETHER IT IS ARCHITECTURAL, ELECTRICAL, MECHANICAL OR STRUCTURAL IN NATURE.

SUBMITTALS

1. SHOP DRAWINGS AND SUBMITTALS SHALL BE SUBMITTED TO THE SER FOR REVIEW BEFORE ANY CONSTRUCTION BEGINS. THESE SUBMITTALS WILL BE REVIEWED FOR OVERALL COMPLIANCE AS IT RELATES TO THE STRUCTURAL DESIGN OF THIS PROJECT. VERIFICATION OF THE SHOP DRAWINGS FOR DIMENSIONS, OR FOR ACTUAL FIELD CONDITIONS IS NOT THE RESPONSIBILITY OF THE SER.
2. ALLOW ENOUGH TIME FOR SUBMITTAL REVIEW, INCLUDING TIME FOR RESUBMITTALS. TIME FOR REVIEW SHALL COMMENCE ON THE SER'S RECEIPT OF SUBMITTAL. ALLOW 15 DAYS FOR INITIAL REVIEW OF EACH SUBMITTAL AND 15 DAYS FOR REVIEW OF EACH RESUBMITTAL.
3. HIGHLIGHT, ENCIRCLE, OR OTHERWISE SPECIFICALLY IDENTIFY DEVIATIONS FROM THE CONTRACT DOCUMENTS ON SUBMITTALS.
4. REVIEW EACH SUBMITTAL AND CHECK FOR COORDINATION WITH OTHER WORK OF THE CONTRACT AND FOR COMPLIANCE WITH THE CONTRACT DOCUMENTS. NOTE CORRECTIONS AND FIELD DIMENSIONS. MARK WITH APPROVAL STAMP BEFORE SUBMITTING TO THE SER. STAMP SHALL INCLUDE NAME OF REVIEWER, DATE OF CONTRACTOR'S APPROVAL, AND STATEMENT CERTIFYING THAT SUBMITTAL HAS BEEN REVIEWED, CHECKED, AND APPROVED FOR COMPLIANCE WITH THE CONTRACT DOCUMENTS.
5. SHOULD CHANGES MADE BY THE SER IN THE SHOP DRAWING REVIEW PROCESS OR RESPONSES TO REQUESTS FOR INFORMATION (RFFS) RESULT IN A CHANGE IN THE CONTRACT PRICE, DO NOT PROCEED UNTIL A CHANGE ORDER IS SUBMITTED AND APPROVED
6. WHERE PROFESSIONAL DESIGN SERVICES OR CERTIFICATIONS BY A DESIGN PROFESSIONAL ARE SPECIFICALLY REQUIRED OF CONTRACTOR BY THE CONTRACT DOCUMENTS, PROVIDE PRODUCTS AND SYSTEMS COMPLYING WITH SPECIFIC PERFORMANCE AND DESIGN CRITERIA INDICATED. IN ADDITION, SUBMIT COPIES OF A STATEMENT, SIGNED AND SEALED BY THE RESPONSIBLE DESIGN PROFESSIONAL, FOR EACH PRODUCT AND SYSTEM SPECIFICALLY ASSIGNED TO CONTRACTOR TO BE DESIGNED OR CERTIFIED BY A DESIGN PROFESSIONAL. INDICATE THE LOCATIONS, MAGNITUDES, DIRECTIONS AND CONNECTION TYPES OF LOADS IMPOSED ON THE SUPPORTING STRUCTURE AND INDICATE THE LOADS AND LOAD COMBINATIONS USED IN THE DESIGN.
7. SHOP DRAWINGS, STATEMENTS, AND CALCULATIONS REQUIRING A PROFESSIONAL DESIGN SERVICES OR CERTIFICATIONS BY A DESIGN PROFESSIONAL THAT ARE SUBMITTED UNSEALED WILL BE RETURNED NOT REVIEWED BY THE SER FOR RESUBMITTAL BY THE CONTRACTOR.
8. *CONSTRUCTION ADMINISTRATION SERVICES ARE NOT INCLUDED IN THE SCOPE OF SERVICES PROVIDED BY NV5 EVEN THOUGH THEY ARE RECOMMENDED AND MAY BE REQUIRED. THE ARCHITECT, OWNER, OR CONTRACTOR MAY ARRANGE FOR THESE SERVICES TO BE PROVIDED BY NV5, OR A 3rd PARTY MAY PROVIDE THESE SERVICES WITH PRIOR APPROVAL FROM NV5. THE FOLLOWING SUBMITTALS ARE RECOMMENDED FOR THIS PROJECT:*
9. CAST-IN-PLACE CONCRETE
   - A. IN ADDITION TO THE FOLLOWING, COMPLY WITH SUBMITTAL REQUIREMENTS IN ACI 301
   - B. PRODUCT DATA: FOR EACH TYPE OF PRODUCT INDICATED
   - C. DESIGN MIXTURES: FOR EACH CONCRETE MIXTURE.
   - D. REBAR SHOP DRAWINGS
   - E. SHOP DRAWINGS FOR THE DESIGN, ERECTION AND REMOVAL OF FORMWORK, SHORES AND RESHORES PREPARED BY OR UNDER THE SUPERVISION OF A QUALIFIED PROFESSIONAL ENGINEER. SHOP DRAWINGS. INCLUDE STRUCTURAL ANALYSIS DATA SIGNED AND SEALED BY THE QUALIFIED PROFESSIONAL ENGINEER RESPONSIBLE FOR THEIR PREPARATION. COMPLY WITH REQUIREMENTS IN "ACI MANUAL OF CONCRETE PRACTICE".
10. TIMBER
    - A. SHOP DRAWINGS: PREPARED BY OR UNDER THE SUPERVISION OF A QUALIFIED PROFESSIONAL ENGINEER. SHOW FABRICATION AND INSTALLATION DETAILS FOR TRUSSES. INCLUDING LOCATION, PITCH, SPAN, CAMBER, CONFIGURATION, SPACING, AND SPLICE DETAILS AND BEARING DETAILS FOR EACH TYPE OF TRUSS REQUIRED. INDICATE SIZES, STRESS GRADES, AND SPECIES OF LUMBER FOR TRUSSES. ALSO, INDICATE LOCATIONS OF PERMANENT BRACING REQUIRED TO PREVENT BUCKLING OF INDIVIDUAL TRUSS MEMBERS DUE TO DESIGN LOADS.
11. TIMBER PILES
    - A. PRODUCT DATA: FOR EACH TYPE OF WOOD PILE AND ACCESSORY INDICATED.
    - B. SHOP DRAWINGS: SHOW FABRICATION AND INSTALLATION DETAILS FOR PILES, INCLUDING DETAILS OF DRIVING SHOES, TIPS OR BOOTS, AND PILE BUTT PROTECTION. INCLUDE ARRANGEMENT OF STATIC PILE REACTION FRAME, TEST AND ANCHOR PILES, EQUIPMENT, AND INSTRUMENTATION. SUBMIT STRUCTURAL ANALYSIS DATA SIGNED AND SEALED BY THE QUALIFIED PROFESSIONAL ENGINEER RESPONSIBLE FOR THEIR PREPARATION.
    - C. ROUND TIMBER PILE TREATMENT DATA AS FOLLOWS, INCLUDING CHEMICAL TREATMENT MANUFACTURER'S WRITTEN INSTRUCTIONS FOR HANDLING, STORING, INSTALLING, AND FINISHING TREATED MATERIAL:
      - a. FOR EACH TYPE OF PRESERVATIVE-TREATED TIMBER PRODUCT INCLUDE CERTIFICATION BY TREATING PLANT STATING TYPE OF PRESERVATIVE SOLUTION AND PRESSURE PROCESS USED, NET AMOUNT OF PRESERVATIVE RETAINED, AND COMPLIANCE WITH APPLICABLE STANDARDS.
      - b. FOR WATERBORNE-TREATED PRODUCTS INCLUDE STATEMENT THAT MOISTURE CONTENT OF TREATED MATERIALS WAS REDUCED TO LEVELS INDICATED BEFORE SHIPMENT TO PROJECT SITE.
    - D. WARRANTY OF CHEMICAL TREATMENT MANUFACTURER FOR EACH TYPE OF TREATMENT.
    - E. STATIC PILE TEST REPORTS: SUBMIT WITHIN TWO DAYS OF COMPLETING EACH TEST.

PILE-DRIVING RECORDS: SUBMIT WITHIN TWO DAYS OF DRIVING EACH PILE.

FOUNDATIONS

1. THE SCOPE OF SERVICES FOR THIS PROJECT PROVIDED BY THE SER BEGINS FROM THE BOTTOM OF THE FOUNDATION ELEMENTS. SUBSURFACE INVESTIGATIONS ARE BEYOND THE SCOPE OF THE STRUCTURAL SERVICES PROVIDED. THE FOUNDATION SYSTEM SHOWN ON THESE DRAWINGS ARE BASED UPON THE ASSUMED SOIL PROPERTIES LISTED BELOW. IT IS THE SOLE RESPONSIBILITY OF THE CONTRACTOR, OWNER OR OWNER'S AGENT TO CONTACT THE SER IF ANY ADVERSE SOIL CONDITIONS ARE ENCOUNTERED DURING CONSTRUCTION. VERIFICATION OF THIS ASSUMED VALUE IS ALSO THE RESPONSIBILITY OF THE CONTRACTOR, OWNER OR OWNER'S AGENT.
2. THE SCOPE OF SERVICES FOR THIS PROJECT PROVIDED BY THE SER BEGINS FROM THE BOTTOM OF THE FOUNDATION ELEMENTS. SUBSURFACE INVESTIGATIONS ARE BEYOND THE SCOPE OF THE STRUCTURAL SERVICES PROVIDED. THE FOUNDATION SYSTEM SHOWN ON THESE DRAWINGS ARE BASED UPON THE SOIL PROPERTIES LISTED BELOW AS STATED IN THE GEOTECHNICAL REPORT BY ***D. CHAD SHERMAN, PE*** OF ***ESP ASSOCIATES, INC.*** IN THEIR REPORT **24-00661-002-GEO** ON MARCH 28, 2025. IT IS THE SOLE RESPONSIBILITY OF THE CONTRACTOR, OWNER OR OWNER'S AGENT TO CONTACT THE SER AND ***NV5 ENGINEERS AND CONSULTANTS, INC.*** IF ANY ADVERSE SOIL CONDITIONS ARE ENCOUNTERED DURING CONSTRUCTION.
   - A. NET ALLOWABLE SOIL BEARING PRESSURE — 1500 PSF
   - B. SUBGRADE MODULUS (k) — 100 PCI
   - C. ULTIMATE FRICTION COEFFICIENT BETWEEN CONCRETE FOUNDATIONS AND SOIL — 0.32
   - D. UNIT WEIGHT OF SOIL — 110 PCF
   - E. MINIMUM INTERNAL ANGLE OF FRICTION — 26°
3. THE BOTTOM OF ALL FOOTINGS SHALL EXTEND BELOW THE FROST LINE FOR THE REGION IN WHICH THE STRUCTURE IS TO BE CONSTRUCTED. HOWEVER, THE TOP OF FOOTING SHALL BE A MINIMUM OF 18" BELOW GRADE.
4. EXCAVATE TO INDICATED ELEVATIONS AND DIMENSIONS WITHIN A TOLERANCE OF PLUS OR MINUS 1 INCH. IF APPLICABLE, EXTEND EXCAVATIONS A SUFFICIENT DISTANCE FROM STRUCTURES FOR PLACING AND REMOVING CONCRETE FORMWORK, FOR INSTALLING SERVICES AND OTHER CONSTRUCTION, AND FOR INSPECTIONS. DO NOT DISTURB BOTTOM OF EXCAVATION. EXCAVATE BY HAND TO FINAL GRADE JUST BEFORE PLACING CONCRETE REINFORCEMENT. TRIM BOTTOMS TO REQUIRED LINES AND GRADES TO LEAVE SOLID BASE TO RECEIVE OTHER WORK
5. ANY FILL SHALL BE PLACED UNDER THE DIRECTION OR RECOMMENDATION OF A LICENSED PROFESSIONAL ENGINEER USING SUITABLE SOILS OR ENGINEERED FILL. PLOW, SCARIFY, BENCH, OR BREAK UP SLOPED SURFACES STEEPER THAN 1 VERTICAL TO 4 HORIZONTAL SO FILL MATERIAL WILL BOND WITH EXISTING MATERIAL. PLACE BACKFILL AND FILL SOIL MATERIALS IN LAYERS NOT MORE THAN 8" IN LOOSE DEPTH FOR MATERIAL COMPACTED BY HEAVY COMPACTION EQUIPMENT, AND NOT MORE THAN 4" IN LOOSE DEPTH FOR MATERIAL COMPACTED BY HAND-OPERATED TAMPERS. COMPACT SOIL MATERIALS TO NOT LESS THAN 95% OF MAXIMUM DRY UNIT WEIGHT ACCORDING TO ASTM D 698, UNLESS A HIGHER PERCENTAGE IS RECOMMENDED BY THE GEOTECHNICAL ENGINEER. UNDER SLABS ON GRADE AND STEPS, SCARIFY AND RECOMPACT TOP 12" OF EXISTING SUBGRADE AND EACH LAYER OF BACKFILL OR FILL SOIL MATERIAL AT 98%.
6. IT IS STRONGLY RECOMMENDED THAT A QUALIFIED INDEPENDENT GEOTECHNICAL ENGINEERING TESTING AGENCY. INSPECT AND TEST SUBGRADES AND EACH FILL OR BACKFILL LAYER AND AT FOOTING SUBGRADES PERFORM TESTING TO VERIFY DESIGN BEARING CAPACITIES.
7. EXCAVATION FOR FOOTINGS SHALL BE LINED TEMPORARY WITH A 6 MIL POLYETHYLENE IF PLACEMENT OF CONCRETE DOES NOT OCCUR WITHIN 24 HOURS OF EXCAVATION.
8. NO CONCRETE SHALL BE POURED AGAINST ANY SUBGRADE CONTAINING WATER, ICE, FROST, OR LOOSE MATERIAL.
9. DO NOT BACKFILL AGAINST CANTILEVERED RETAINING WALL UNTIL THE CONCRETE HAS ATTAINED 100 PERCENT OF ITS DESIGN STRENGTH. REFER TO THE PLANS FOR ADDITIONAL REQUIREMENTS.
10. PROVIDE BRACING AND SHORING FOR ALL BASEMENT FOUNDATION WALLS AND WALLS INDICATED AS RESTRAINED PRIOR TO BACKFILLING. THE BRACING AND SHORING SHALL REMAIN IN PLACE UNTIL ALL SLABS ON GRADE, ELEVATED SLABS AND BEAMS FRAMING INTO THE WALL, ABOVE AND BELOW, HAVE BEEN PLACED, HAVE CURED FOR AT LEAST 7 DAYS AND HAVE ATTAINED 100 PERCENT OF THEIR DESIGN STRENGTH.
11. BACKFILL PLACED IMMEDIATELY BEHIND WALLS SHALL BE COMPACTED WITH HAND OPERATED EQUIPMENT.
12. CONSULT THE GEOTECHNICAL REPORT FOR FURTHER RECOMMENDATIONS AND REQUIREMENTS

TIMBER

1. SEE BOOK SPECIFICATIONS FOR WOOD FRAMING MEMBER REQUIREMENTS.
2. FRAMING SHALL COMPLY WITH AF&PA'S "DETAILS FOR CONVENTIONAL WOOD FRAME CONSTRUCTION," UNLESS OTHERWISE INDICATED. STRUCTURAL MEMBERS SHALL NOT BE SPLICED BETWEEN SUPPORTS, UNLESS OTHERWISE INDICATED. STUDS SHALL BE CONTINUOUS FROM THE SOLE PLATE TO THE TOP PLATE. STUDS SHALL ONLY BE DISCONTINUOUS WHEN SUPPORTING BEAMS OR HEADERS AT OPENINGS. THOSE STUDS SHALL BE ATTACHED TO CONTINUOUS STUDS IN ACCORDANCE WITH THE REQUIREMENTS ON THE DESIGN DOCUMENTS.
3. SECURELY ATTACH ROUGH CARPENTRY WORK TO SUBSTRATE BY ANCHORING AND FASTENING AS INDICATED BELOW. WHERE ROUGH CARPENTRY IS EXPOSED TO WEATHER, IN GROUND CONTACT, PRESSURE-PRESERVATIVE TREATED, OR IN AREA OF HIGH RELATIVE HUMIDITY, PROVIDE FASTENERS WITH HOT-DIP ZINC COATING COMPLYING WITH ASTM A 153:
   - A. NES NER-272 FOR POWER-DRIVEN FASTENERS.
   - B. TABLE 2304.9.1, "FASTENING SCHEDULE," IN ICC'S INTERNATIONAL BUILDING CODE.
   - C. NAILS, BRADS, AND STAPLES: ASTM F 1667
   - D. WOOD SCREWS: ASME B18.6.1.
   - E. LAG BOLTS: ASME B18.2.1.
   - F. STEEL BOLTS COMPLYING WITH ASTM A 307, GRADE A; WITH ASTM A 563 HEX NUTS AND, FLAT WASHERS.

CONCRETE

1. SEE BOOK SPECIFICATIONS FOR CONCRETE REQUIREMENTS.

DRAWING INDEX

S0.1	SPECIFICATIONS, INDEX
S0.2	ABBREVIATIONS, SYMBOLS & LAP LENGTH SCHEDULES
S0.3	LAKE MYRA PARK PLAN VIEW
S0.4	LAKE MYRA BRIDGE PLAN VIEW
S1.0	TYPICAL RETAINING WALL DETAILS
S1.1	TYPICAL BRIDGE DETAILS
S1.2	BOARDWALK PLANS
S1.3	TYPICAL BOARDWALK DETAILS

TOTAL: 8

Susan Hatchell
Landscape Architecture, PLLC
711 W. North Street, Raleigh, NC 27603
p: 919-838-9600 f: 919-838-9700

NV5
NV5 ENGINEERS & CONSULTANTS, INC.
3300 REGENCY PARKWAY
CARY, NC 27518
P: 919.851.1912 www.NV5.com
NC License # P-1333 Project # 2023018.00 Engineer #084

Signed by:
4BB1C3F274B7442...
32612 — JOSEPH L. THOMPSON — ENGINEER
September 29, 2026
NORTH CAROLINA PROFESSIONAL ENGINEERING CORP. F-1333

SPECIFICATIONS, INDEX

LAKE MYRA COUNTY PARK
Wake County, NC

REVISIONS

3	ADDENDUM 3	9/29/2026

Date: 8/20/2026

S0.1

8/20/2026 2:29:36 PM

Docusign Envelope ID: 3CDCD2C9-8BED-8264-836A-D89802AC2A90

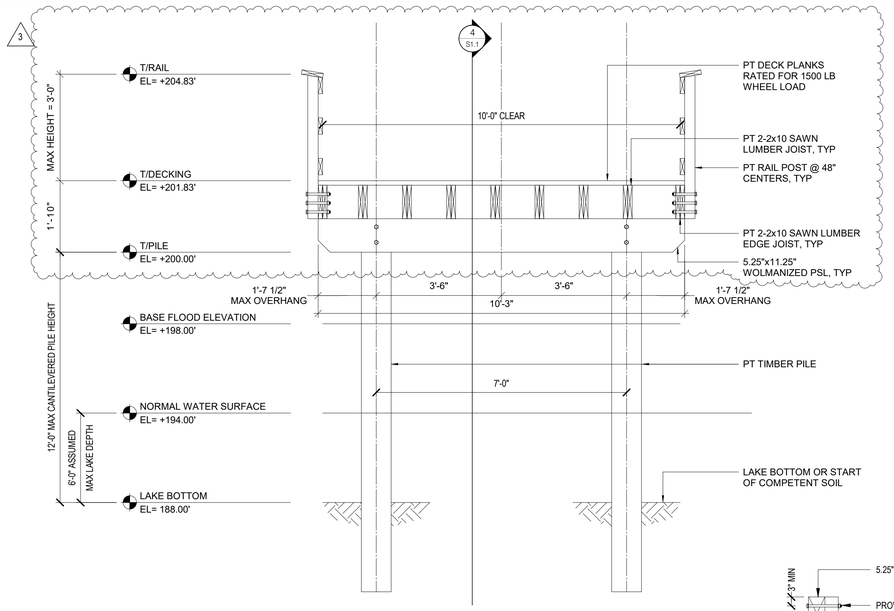

1 S1.1 SECTION
BENT ELEVATION - 12'-0" MAX CANTILEVERED HEIGHT
SCALE: 1/2" = 1'-0"

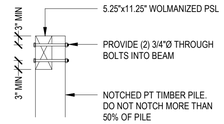

BEAM ATTACHMENT TO PILE

NOTES:
1. CROSS BRACING REQUIRED AT LOCATIONS WHERE HEIGHT OF PILE FROM TOP OF COMPETENT SOIL TO TOP OF PILE EXCEEDS 12'-0".
2. REFER TO DETAIL 1/S1.1 FOR ADDITIONAL INFORMATION.

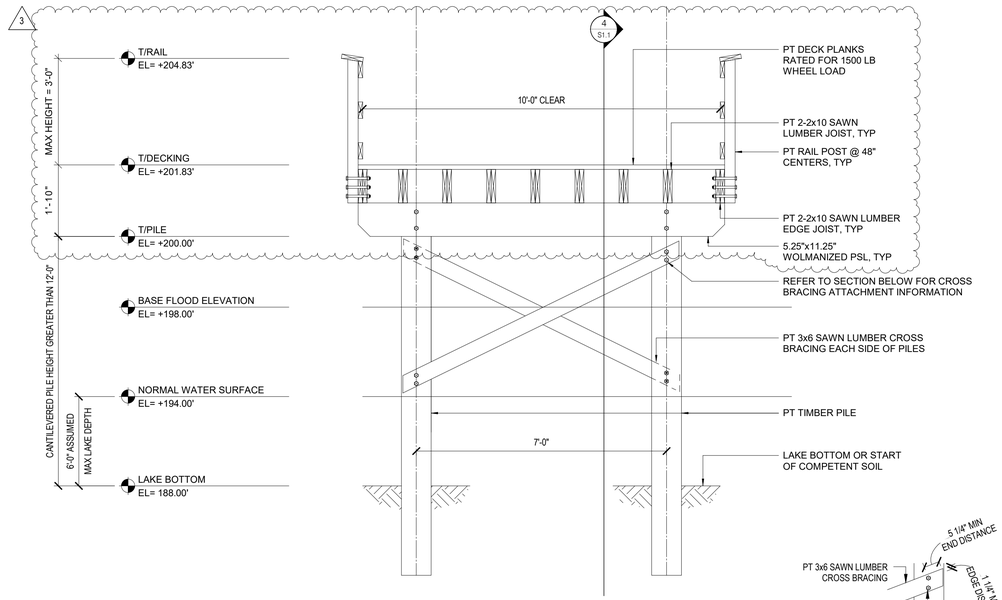

2 SECTION
ALTERNATE 1: BENT ELEVATION - CANTILEVERED PILE HEIGHT GREATER THAN 12'-0"
SCALE: 1/2" = 1'-0"

CROSS BRACING ATTACHMENT TO PILE

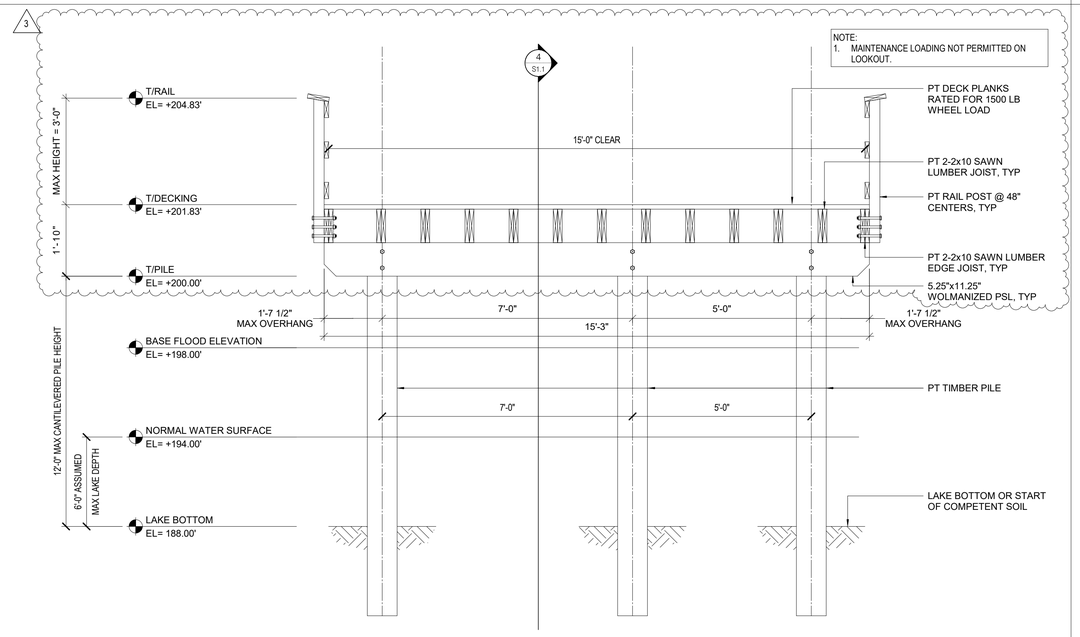

3 SECTION
ALTERNATE 1: BENT ELEVATION AT LOOKOUT
SCALE: 1/2" = 1'-0"

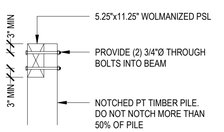

BEAM ATTACHMENT TO PILE

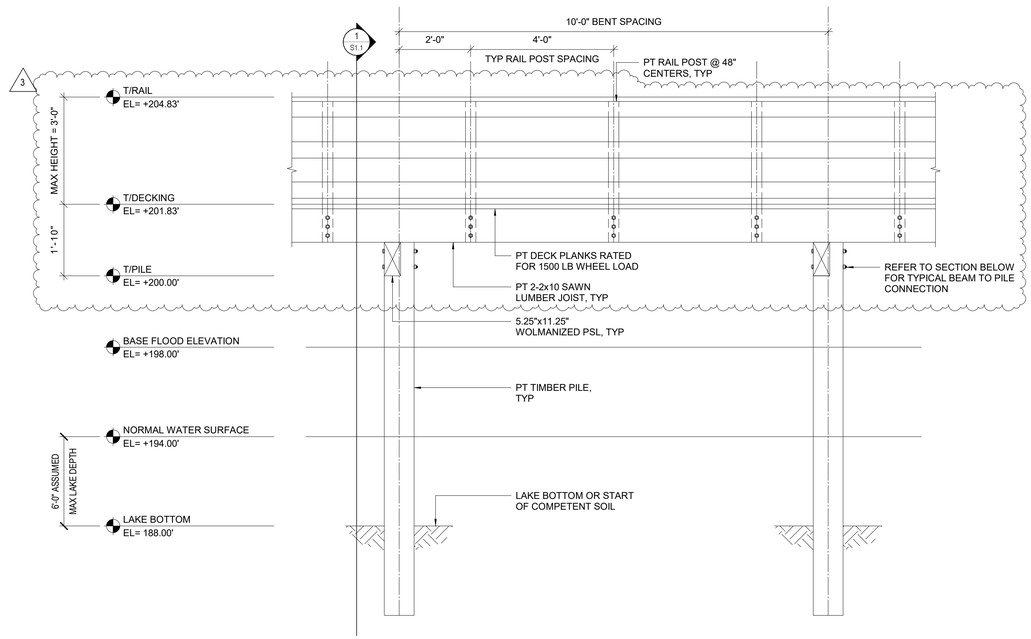

4 S1.1 SECTION
TYPICAL SPAN ELEVATION
SCALE: 1/2" = 1'-0"

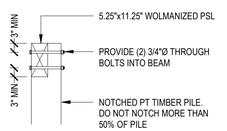

BEAM ATTACHMENT TO PILE

Susan Hatchell
Landscape Architecture, PLLC
711 W. North Street, Raleigh, NC 27603
p: 919-838-9600 f: 919-838-9700

NV5
NV5 ENGINEERS & CONSULTANTS, INC.
3300 REGENCY PARKWAY
CARY, NC 27518
P: 919.851.1912 www.NV5.com
NC License # F-1333 Project # 2023018.00 Engineer ABM

Signed by:
4BB1C3F274B7442...
32612
JOSEPH L. THOMPSON
September 29, 2026
NORTH CAROLINA PROFESSIONAL ENGINEERING CORP. F-1333

TYPICAL BRIDGE DETAILS

LAKE MYRA COUNTY PARK
Wake County, NC

REVISIONS

3	ADDENDUM 3	9/29/2026

Date: 8/20/2026

S1.1

9/29/2026 2:29:36 PM

Docusign Envelope ID: 3CDCD2C9-8BED-8264-836A-D89802AC2A90

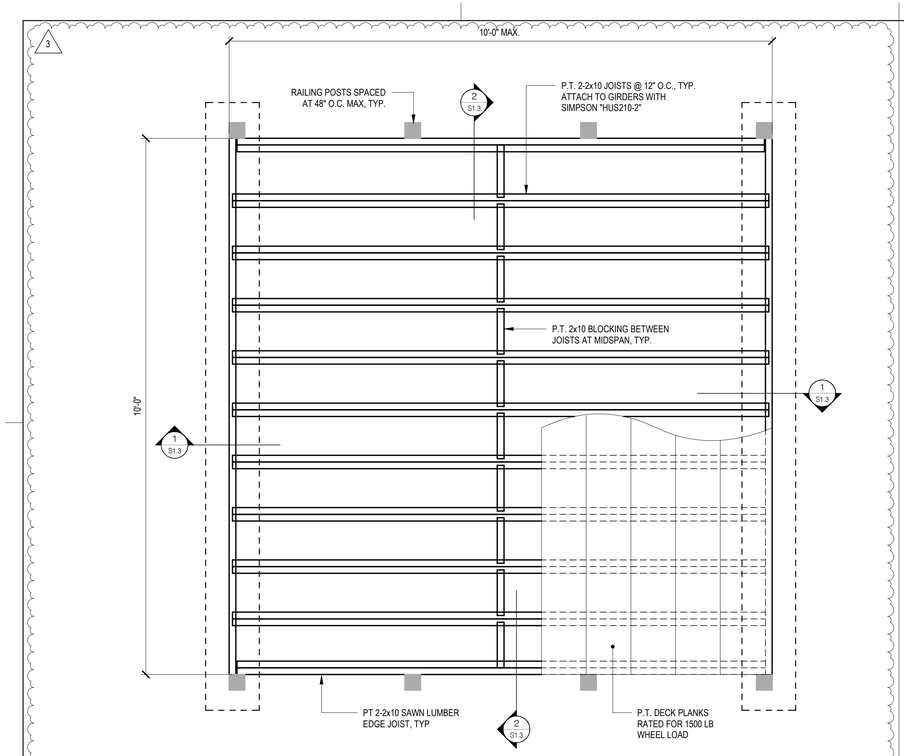

1 FRAMING PLAN - 10x10 BOARDWALK
SCALE: 3/4" = 1'-0"

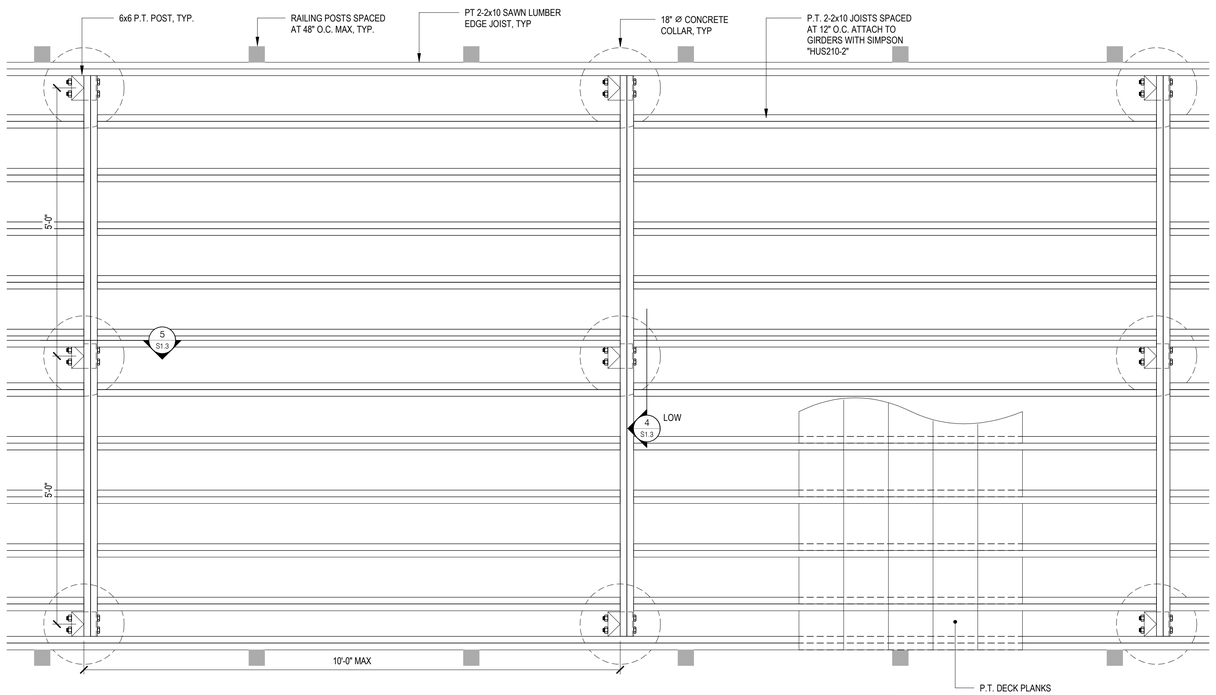

2 BOARDWALK LAYOUT
SCALE: 3/4" = 1'-0"

3
NOTE:
1. MAINTENANCE LOADING NOT PERMITTED ON LOOKOUT.

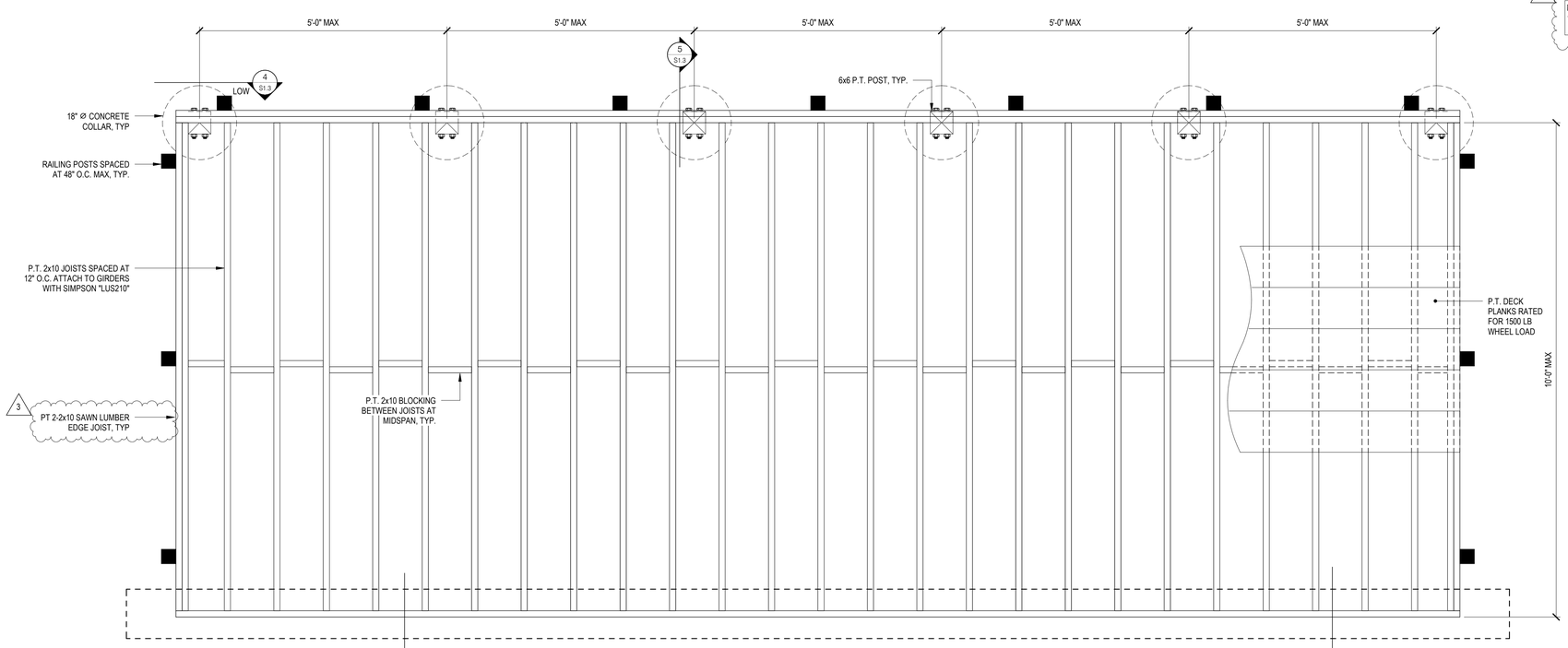

3 LOOKOUT LAYOUT
SCALE: 3/4" = 1'-0"

Susan Hatchell
Landscape Architecture, PLLC
711 W. North Street, Raleigh, NC 27603
p: 919-838-9600 f: 919-838-9700

NV5
NV5 ENGINEERS & CONSULTANTS, INC.
3300 REGENCY PARKWAY
CARY, NC 27518
P: 919.851.1912 www.NV5.com
NC License # F-1333 Project # 2023018.00 Engineer ABM

Signed by:
4BB1C3F274B7442...
NORTH CAROLINA 32612 PROFESSIONAL ENGINEER JOSEPH L. THOMPSON
September 29, 2026
NORTH CAROLINA PROFESSIONAL ENGINEERING CORP. F-1333

BOARDWALK PLANS

LAKE MYRA COUNTY PARK
Wake County, NC

REVISIONS

3	ADDENDUM 3	9/29/2026

Date: 8/20/2026

S1.2

8/20/2026 2:30:37 PM

Docusign Envelope ID: 3CDCD2C9-8BED-8264-836A-D89802AC2A90

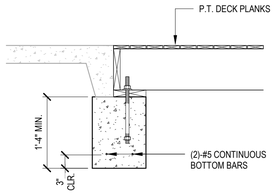

1 S1.2 SECTION
BOARDWALK END SECTION AT FOOTING
SCALE: 3/4" = 1'-0"

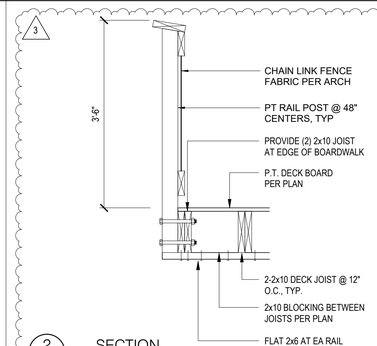

2 S1.2 SECTION
TYPICAL 42" HIGH BOARDWALK RAILING
SCALE: 3/4" = 1'-0"

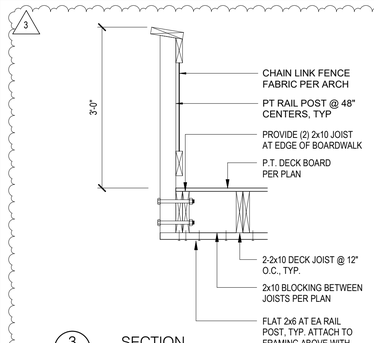

3 SECTION
TYPICAL 36" HIGH BOARDWALK RAILING
SCALE: 3/4" = 1'-0"

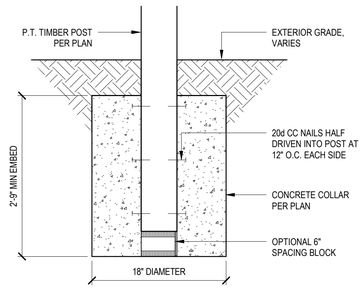

4 S1.2 SECTION
TIMBER POST BASE CONNECTION WITH CONCRETE COLLAR
SCALE: 3/4" = 1'-0"

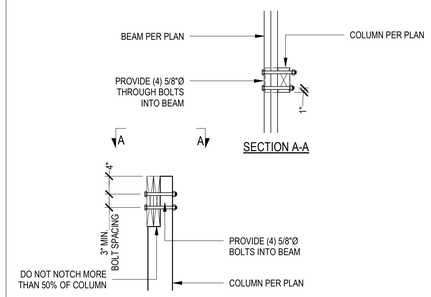

5 S1.2 SECTION
TYPICAL NOTCHED COLUMN TO CONTINUOUS BEAM CONNECTION
SCALE: 3/4" = 1'-0"

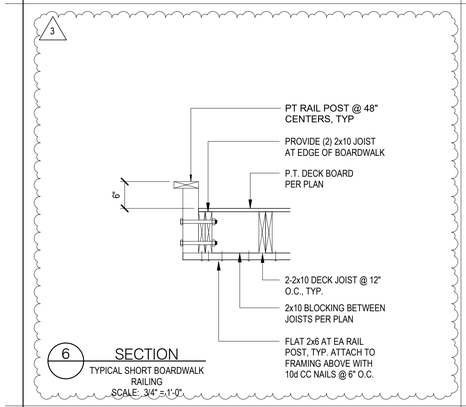

6 SECTION
TYPICAL SHORT BOARDWALK RAILING
SCALE: 3/4" = 1'-0"

Susan Hatchell
Landscape Architecture, PLLC
711 W. North Street, Raleigh, NC 27603
p: 919-838-9600 f: 919-838-9700

NV5
NV5 ENGINEERS & CONSULTANTS, INC.
3300 REGENCY PARKWAY
CARY, NC 27518
P: 919.851.1912 www.NV5.com
NC License # F-1333 Project # 2023018.00 Engineer ABM

Signed by:
4BB1C3F274B7442...
32612
JOSEPH L. THOMAS
September 29, 2026
NORTH CAROLINA PROFESSIONAL ENGINEERING CORP. F-1333

TYPICAL BOARDWALK DETAILS

LAKE MYRA COUNTY PARK
Wake County, NC

REVISIONS

3	ADDENDUM 3	9/29/2026

Date: 8/20/2026

S1.3

8/29/2026 3:36:37 PM